Interference Suppression Film Capacitor - Class X2 Radial MKP 310 V_{AC} - Standard Across the Line

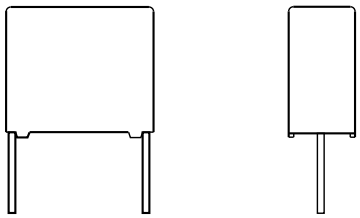

FEATURES

- Compliant with IEC 60381-14: AMD1 THB grade IA
- Self-healing properties
- For temperature up to 110 °C
- Material categorization: for definitions of compliance please see www.vishay.com/doc?99912

Pb-free
RoHS COMPLIANT

APPLICATIONS

For standard across the line X2 applications.

See also application note: www.vishay.com/doc?28153

QUICK REFERENCE DATA	
Capacitance range (E12 series)	0.001 µF to 4.7 µF (preferred values acc. to E6)
Capacitance tolerance	± 20 %; ± 10 %; (± 5 % on request)
Rated AC voltage	310 V_{AC}; 50 Hz to 60 Hz
Permissible DC voltage	800 V_{DC} at 85 °C 630 V_{DC} at 110 °C
Climatic testing class according to IEC 60068-1	55 / 110 / 56 / B for volumes > 1750 mm^3 55 / 110 / 56 / C for volumes ≤ 1750 mm^3
Maximum application temperature	C ≤ 470 nF: 110 °C (125 °C for less than 1000 h) C > 470 nF: 110 °C
Reference standards	IEC 60384-14:2013 IEC 60384-14:2013 / AMD1:2016 EN 60384-14:2013 + AMD1:2016 IEC 60065, pass. flamm. class B for volumes > 1750 mm^3 CSA-E384-14; CQC UL 60384-14
Dielectric	Polypropylene film
Electrodes	Metallized film
Construction	Mono construction
Encapsulation	Plastic case, epoxy resin sealed, flame retardant class UL 94 V-0
Leads	Tinned wire
Marking	C-value; tolerance; rated voltage; sub-class; manufacturer's type; code for dielectric material; manufacturer location, year and week; manufacturer's logo or name; safety approvals

Notes

- For more detailed data and test requirements, contact rfi@vishay.com

DIMENSIONS in millimeters

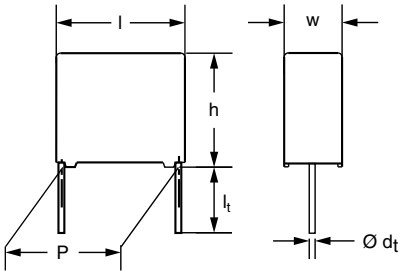

For technical questions, contact: rfi@vishay.com
THIS DOCUMENT IS SUBJECT TO CHANGE WITHOUT NOTICE. THE PRODUCTS DESCRIBED HEREIN AND THIS DOCUMENT ARE SUBJECT TO SPECIFIC DISCLAIMERS, SET FORTH AT www.vishay.com/doc?91000

COMPOSITION OF CATALOG NUMBER

The new RFI Film Capacitor Code is made up 14 digit code (example)

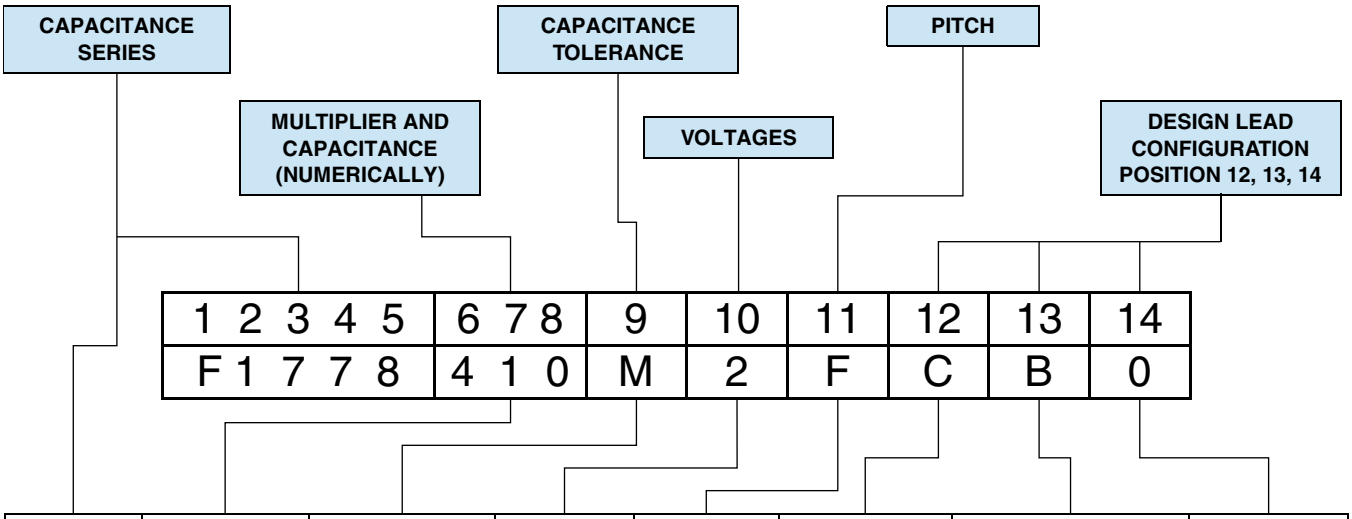

1 2 3 4 5	6 7 8	9	10	11	12	13	14 (POS.)
F 1 7 7 8	**4 1 0**	**M**	**2**	**F**	**C**	**B**	**0**
Capacitance Series	Capacitance Value expressed in pF	Capacitance Tolerance	Rated Voltage or special versions	Pitch	Design (lead configuration) Pos. 12/13/14		
Pos. 1 to 5	Pos. 6/7/8	Pos. 9	Pos. 10	Pos. 11	Pos. 12	Pos. 13	Pos. 14
	represent significant figures Pos. 6 specifies multiplier (in 10) e.g.: 0.01 µF = 310 0.1 µF = 410 1.0 µF = 510	e.g. 0 (zero) = spaceholder M = ± 20 % K = ± 10 % J = ± 5 % Specials: A = + 10 %/- 0 % B = + 5 %/+ 15 % P = + 0 %/- 15 % R = + 10 %/- 5 % U = + 10 %/+ 20 %	e.g. 0 (zero) = spaceholder 2 = 310 V_{AC} 3 = 310 V_{AC}	e.g. 0 (zero) = spaceholder C = 7.5 mm D = 10.0 mm F = 15.0 mm I = 22.5 mm K = 27.5 mm	e.g. 0 (zero) = spaceholder S = 3.5 - 0.5 mm P = 3.5 ± 0.3 mm B = 4 - 1 mm M = 5 - 1 mm C = 6 - 1 mm E = 10 - 1 mm T = 11 - 1 mm D = 15 - 1 mm F = 19 - 1 mm H = 20 + 5 mm L = 30 + 5 mm K = 40 + 5 mm N = 45 - 2 mm other = special version	Packaging of specialities 0 (zero) = spaceholder B = bulk/loose T = tray/pallet (2) U = tape and reel (1) (H: 16.5 mm, Ø 350 mm) R = tape and reel (1) (H: 16.5 mm, Ø 500 mm) V = tape and reel (1) (H: 18.5 mm, Ø 350 mm) W = tape and reel (1) (H: 18.5 mm, Ø 500 mm) G = Ammopack (1) (H: 18.5 mm) Z = leaded wound element (unencapsulated) other = special version	Special internal code 0 (zero) = spaceholder other = special version

Notes

(1) For detailed tape specification refer to packaging information: www.vishay.com/doc?28139

(2) Packaging will be bulk for all capacitors with pitch ≤ 15 mm and such with long leads (> 5 mm).
Capacitors with short leads up to 5 mm and pitch > 15 mm will be in tray and asking code will be “T”.

For technical questions, contact: rfi@vishay.com

THIS DOCUMENT IS SUBJECT TO CHANGE WITHOUT NOTICE. THE PRODUCTS DESCRIBED HEREIN AND THIS DOCUMENT ARE SUBJECT TO SPECIFIC DISCLAIMERS, SET FORTH AT www.vishay.com/doc?91000

SPECIFIC REFERENCE DATA

DESCRIPTION	VALUE	
Rated AC voltage (U_{RAC})	310 V	
Permissible DC voltage (U_{RDC})	630 V	
Tangent of loss angle:	at 1 kHz	at 10 kHz
C < 470 nF	≤ 10 x 10^{-4}	≤ 20 x 10^{-4}
470 nF ≤ C ≤ 1 µF	≤ 20 x 10^{-4}	≤ 70 x 10^{-4}
C > 1 µF	≤ 30 x 10^{-4}	-
Rated voltage pulse slope $(dU/dt)_R$ at 435 V_{DC}		
Pitch = 7.5 mm	600 V/µs	
Pitch = 10 mm	600 V/µs	
Pitch = 15 mm	400 V/µs	
Pitch = 22.5 mm	150 V/µs	
Pitch = 27.5 mm	100 V/µs	
R between leads, for C ≤ 0.33 µF at 100 V; 1 min	> 15 000 MΩ	
RC between leads, for C > 0.33 µF at 100 V; 1 min	> 5000 s	
R between leads and case; 100 V; 1 min	> 30 000 MΩ	
Withstanding (DC) voltage (cut off current 10 mA) [1]; rise time 1000 ≤ V/s:		
C ≤ 1 µF	2200 V; 1 min	
C > 1 µF	1800 V; 1 min	
Withstanding (AC) voltage between leads and case	2120 V; 1 min	
Max. application temperature for 0.001 µF ≤ C ≤ 0.47 µF	110 °C (125 °C less than 1000 h)	
Max. application temperature for C > 0.47 µF	110 °C	

Note

[1] See "Voltage Proof Test for Metallized Film Capacitors": www.vishay.com/doc?28169

ELECTRICAL DATA AND ORDERING CODE

U_{RAC} (V)	CAP. µF POS. 6 TO 8	TOLERANCE CODE POS. 9 J = ± 5 % K = ± 10 % M = ± 20 %	DIMENSIONS MAX. w x h x l (mm)	MASS (g) [3]	SPQ [4] SHORT LEADS (PIECES)	ORDERING CODE [2]					
						TYPE	C-VALUE	TOL.	VOLTAGE	PITCH	LEAD LENGTH DESIGN
						1 TO 5	6 TO 8	9	10	11	12 TO 14 [1]
310	PITCH 7.5 mm ± 0.4 mm; d_t = 0.50 mm ± 0.05 mm										
	0.0010	K / M	4.0 x 9.0 x 10.0	0.45	1500	F1778	210	.	.	C	. . 0
	0.0012	K	4.0 x 9.0 x 10.0	0.45	1500	F1778	212	K	.	C	. . 0
	0.0015	K / M	4.0 x 9.0 x 10.0	0.45	1500	F1778	215	.	.	C	. . 0
	0.0018	K	4.0 x 9.0 x 10.0	0.45	1500	F1778	218	K	.	C	. . 0
	0.0022	K / M	4.0 x 9.0 x 10.0	0.45	1500	F1778	222	.	.	C	. . 0
	0.0027	K	4.0 x 9.0 x 10.0	0.45	1500	F1778	227	K	.	C	. . 0
	0.0033	K / M	4.0 x 9.0 x 10.0	0.45	1500	F1778	233	.	.	C	. . 0
	0.0039	K	4.0 x 9.0 x 10.0	0.45	1500	F1778	239	K	.	C	. . 0
	0.0047	K / M	4.0 x 9.0 x 10.0	0.45	1500	F1778	247	.	.	C	. . 0
	0.0056	K	4.0 x 9.0 x 10.0	0.45	1500	F1778	256	K	.	C	. . 0
	0.0068	K / M	4.0 x 9.0 x 10.0	0.45	1500	F1778	268	.	.	C	. . 0
	0.0082	K	4.0 x 9.0 x 10.0	0.45	1500	F1778	282	K	.	C	. . 0
	0.010	K / M	4.0 x 9.0 x 10.0	0.45	1500	F1778	310	.	.	C	. . 0
	0.012	K	4.0 x 9.0 x 10.0	0.45	1500	F1778	312	K	.	C	. . 0
	0.015	K / M	4.0 x 9.0 x 10.0	0.45	1500	F1778	315	.	.	C	. . 0
	0.018	K	4.0 x 9.0 x 10.0	0.45	1500	F1778	318	K	.	C	. . 0
	0.022	K / M	4.0 x 9.0 x 10.0	0.45	1500	F1778	322	.	.	C	. . 0
	0.027	K	4.0 x 9.0 x 10.0	0.45	1500	F1778	327	K	.	C	. . 0
	0.033	K	5.0 x 10.5 x 10.0	0.6	1000	F1778	333	K	.	C	. . 0
	0.033	M	4.0 x 9.0 x 10.0	0.45	1500	F1778	333	M	.	C	. . 0
	0.039	K	5.0 x 10.5 x 10.0	0.6	1000	F1778	339	K	.	C	. . 0
	0.047	K	5.0 x 10.5 x 10.0	0.6	1000	F1778	347	K	.	C	. . 0
	0.047	M	5.0 x 10.5 x 10.0	0.4	1000	F1778	347	M	.	C	. . 0
	0.056	K	6.0 x 11.5 x 10.0	0.8	750	F1778	356	K	.	C	. . 0
	0.068	M	6.0 x 11.5 x 10.0	0.8	750	F1778	368	M	.	C	. . 0

For technical questions, contact: rfi@vishay.com
THIS DOCUMENT IS SUBJECT TO CHANGE WITHOUT NOTICE. THE PRODUCTS DESCRIBED HEREIN AND THIS DOCUMENT ARE SUBJECT TO SPECIFIC DISCLAIMERS, SET FORTH AT www.vishay.com/doc?91000

ELECTRICAL DATA AND ORDERING CODE

U_{RAC} (V)	CAP. µF POS. 6 TO 8	TOLERANCE CODE POS. 9 J = ± 5 % K = ± 10 % M = ± 20 %	DIMENSIONS MAX. w x h x l (mm)	MASS (g) (3)	SPQ (4) SHORT LEADS (PIECES)	ORDERING CODE (2)					
						TYPE	C-VALUE	TOL.	VOLTAGE	PITCH	LEAD LENGTH DESIGN
						1 TO 5	6 TO 8	9	10	11	12 TO 14 (1)
310	PITCH 10 mm ± 0.4 mm; d_t = 0.60 mm ± 0.06 mm										
	0.0010	K / M	4.0 x 10.0 x 12.5	0.6	1500	F1778	210	.	.	D	. . 0
	0.0012	K	4.0 x 10.0 x 12.5	0.6	1500	F1778	212	K	.	D	. . 0
	0.0015	K / M	4.0 x 10.0 x 12.5	0.6	1500	F1778	215	.	.	D	. . 0
	0.0018	K	4.0 x 10.0 x 12.5	0.6	1500	F1778	218	K	.	D	. . 0
	0.0022	K / M	4.0 x 10.0 x 12.5	0.6	1500	F1778	222	.	.	D	. . 0
	0.0027	K	4.0 x 10.0 x 12.5	0.6	1500	F1778	227	K	.	D	. . 0
	0.0033	K / M	4.0 x 10.0 x 12.5	0.6	1500	F1778	233	.	.	D	. . 0
	0.0039	K	4.0 x 10.0 x 12.5	0.6	1500	F1778	239	K	.	D	. . 0
	0.0047	K / M	4.0 x 10.0 x 12.5	0.6	1500	F1778	247	.	.	D	. . 0
	0.0056	K	4.0 x 10.0 x 12.5	0.6	1500	F1778	256	K	.	D	. . 0
	0.0068	K / M	4.0 x 10.0 x 12.5	0.6	1500	F1778	268	.	.	D	. . 0
	0.0082	K	4.0 x 10.0 x 12.5	0.6	1500	F1778	282	K	.	D	. . 0
	0.010	K / M	4.0 x 10.0 x 12.5	0.6	1500	F1778	310	.	.	D	. . 0
	0.012	K	4.0 x 10.0 x 12.5	0.6	1500	F1778	312	K	.	D	. . 0
	0.015	K / M	4.0 x 10.0 x 12.5	0.6	1500	F1778	315	.	.	D	. . 0
	0.018	K	4.0 x 10.0 x 12.5	0.6	1250	F1778	318	K	.	D	. . 0
	0.022	K / M	4.0 x 10.0 x 12.5	0.6	1250	F1778	322	.	.	D	. . 0
	0.027	K	4.0 x 10.0 x 12.5	0.6	1250	F1778	327	K	.	D	. . 0
	0.033	K / M	4.0 x 10.0 x 12.5	0.6	1000	F1778	333	.	.	D	. . 0
	0.039	K	4.0 x 10.0 x 12.5	0.6	1000	F1778	339	K	.	D	. . 0
	0.047	K	4.0 x 10.0 x 12.5	0.6	750	F1778	347	K	.	D	. . 0
	0.047	M	4.0 x 10.0 x 12.5	0.6	1000	F1778	347	M	.	D	. . 0
	0.056	K	5.0 x 11.0 x 12.5	0.82	1000	F1778	356	K	.	D	. . 0
	0.068	K / M	5.0 x 11.0 x 12.5	0.82	750	F1778	368	.	.	D	. . 0
	0.082	K	6.0 x 12.0 x 12.5	1.10	750	F1778	382	K	.	D	. . 0
	0.100	K / M	6.0 x 12.0 x 12.5	1.10	750	F1778	410	.	.	D	. . 0
	PITCH 15 mm ± 0.4 mm; d_t = 0.60 mm ± 0.06 mm										
	0.010	K / M	5.0 x 11.0 x 17.5	1.0	750	F1778	310	.	.	F	. . 0
	0.012	K	5.0 x 11.0 x 17.5	1.0	750	F1778	312	K	.	F	. . 0
	0.015	K / M	5.0 x 11.0 x 17.5	1.0	750	F1778	315	.	.	F	. . 0
	0.018	K	5.0 x 11.0 x 17.5	1.0	750	F1778	318	K	.	F	. . 0
	0.022	K / M	5.0 x 11.0 x 17.5	1.0	750	F1778	322	.	.	F	. . 0
	0.027	K	5.0 x 11.0 x 17.5	1.0	750	F1778	327	K	.	F	. . 0
	0.033	K / M	5.0 x 11.0 x 17.5	1.0	750	F1778	333	.	.	F	. . 0
	0.039	K	5.0 x 11.0 x 17.5	1.0	750	F1778	339	K	.	F	. . 0
	0.047	K / M	5.0 x 11.0 x 17.5	1.0	750	F1778	347	.	.	F	. . 0
	0.056	K	5.0 x 11.0 x 17.5	1.0	750	F1778	356	K	.	F	. . 0
	0.068	K / M	5.0 x 11.0 x 17.5	1.0	750	F1778	368	.	.	F	. . 0
	0.082	K	5.0 x 11.0 x 17.5	1.0	750	F1778	382	K	.	F	. . 0
	0.10	K	5.0 x 11.0 x 17.5	1.0	600	F1778	410	K	.	F	. . 0
	0.10	M	5.0 x 11.0 x 17.5	1.0	750	F1778	410	M	.	F	. . 0
	0.12	K	6.0 x 12.0 x 17.5	1.4	600	F1778	412	K	.	F	. . 0
	0.15	K	6.0 x 12.0 x 17.5	1.4	450	F1778	415	K	.	F	. . 0
	0.15	M	6.0 x 12.0 x 17.5	1.4	600	F1778	415	M	.	F	. . 0
	PITCH 15 mm ± 0.4 mm; d_t = 0.80 mm ± 0.08 mm										
	0.18	K	7.0 x 13.5 x 17.5	1.8	450	F1778	418	K	.	F	. . 0
	0.22	K / M	7.0 x 13.5 x 17.5	1.8	300	F1778	422	.	.	F	. . 0
	0.27	K	8.5 x 15.0 x 17.5	2.4	240	F1778	427	K	.	F	. . 0
	0.33	K / M	8.5 x 15.0 x 17.5	2.4	240	F1778	433	.	.	F	. . 0
	0.39	K	10.0 x 16.5 x 17.5	3	225	F1778	439	K	.	F	. . 0
	0.47	K / M	10.0 x 16.5 x 17.5	3	225	F1778	447	.	.	F	. . 0
	0.56	K / M	10.0 x 18.5 x 18.0	4.3	225	F1778	456	.	.	F	. . 0
	0.68	M	11.0 x 18.5 x 18.0	5.5	225	F1778	468	M	.	F	. . 0

For technical questions, contact: rfi@vishay.com
THIS DOCUMENT IS SUBJECT TO CHANGE WITHOUT NOTICE. THE PRODUCTS DESCRIBED HEREIN AND THIS DOCUMENT ARE SUBJECT TO SPECIFIC DISCLAIMERS, SET FORTH AT www.vishay.com/doc?91000

ELECTRICAL DATA AND ORDERING CODE

U_{RAC} (V)	CAP. µF POS. 6 TO 8	TOLERANCE CODE POS. 9 J = ± 5 % K = ± 10 % M = ± 20 %	DIMENSIONS MAX. w x h x l (mm)	MASS (g) (3)	SPQ (4) SHORT LEADS (PIECES)	ORDERING CODE (2)					
						TYPE	C-VALUE	TOL.	VOLTAGE	PITCH	LEAD LENGTH DESIGN
						1 TO 5	6 TO 8	9	10	11	12 TO 14 (1)
310	PITCH 22.5 mm ± 0.4 mm; d_t = 0.80 mm ± 0.08 mm										
	0.12	K	6.0 x 15.5 x 26.0	2.4	260	F1778	412	K	.	I	. . 0
	0.15	K / M	6.0 x 15.5 x 26.0	2.4	260	F1778	415	.	.	I	. . 0
	0.18	K	6.0 x 15.5 x 26.0	2.4	260	F1778	418	K	.	I	. . 0
	0.22	K / M	6.0 x 15.5 x 26.0	2.4	260	F1778	422	.	.	I	. . 0
	0.27	K	6.0 x 15.5 x 26.0	2.4	200	F1778	427	K	.	I	. . 0
	0.33	K	6.0 x 15.5 x 26.0	2.4	190	F1778	433	K	.	I	. . 0
	0.33	M	6.0 x 15.5 x 26.0	2.4	235	F1778	433	M	.	I	. . 0
	0.39	K	7.0 x 16.5 x 26.0	2.9	200	F1778	439	K	.	I	. . 0
	0.47	K	7.0 x 16.5 x 26.0	2.9	190	F1778	447	K	.	I	. . 0
	0.47	M	7.0 x 16.5 x 26.0	2.9	200	F1778	447	M	.	I	. . 0
	0.56	K	8.5 x 18.0 x 26.0	3.8	150	F1778	456	K	.	I	. . 0
	0.68	K	10.0 x 19.5 x 26.0	6.8	150	F1778	468	K	.	I	. . 0
	0.68	M	8.5 x 18.0 x 26.0	3.8	170	F1778	468	M	.	I	. . 0
	0.82	K	10.0 x 19.5 x 26.0	6.8	200	F1778	482	K	.	I	. . 0
	1.0	K	12.0 x 22.0 x 26.0	7.8	150	F1778	510	K	.	I	. . 0
	1.0	M	10.0 x 19.5 x 26.0	6.8	135	F1778	510	M	.	I	. . 0
	1.5	M	12.5 x 22.5 x 26.5	10	140	F1778	515	M	.	I	. . 0
	PITCH 27.5 mm ± 0.4 mm; d_t = 0.80 mm ± 0.08 mm										
	0.47	K / M	9.0 x 19.0 x 31.5	5.5	160	F1778	447	.	.	K	. . 0
	0.56	K	9.0 x 19.0 x 31.5	5.5	160	F1778	456	K	.	K	. . 0
	0.68	K / M	9.0 x 19.0 x 31.5	5.5	160	F1778	468	.	.	K	. . 0
	0.82	K	11.0 x 21.0 x 31.0	7.4	125	F1778	482	K	.	K	. . 0
	1.0	K / M	11.0 x 21.0 x 31.0	7.4	125	F1778	510	.	.	K	. . 0
	1.2	K	11.0 x 21.0 x 31.0	7.4	110	F1778	512	K	.	K	. . 0
	1.5	K / M	13.0 x 23.0 x 31.0	9.2	110	F1778	515	.	.	K	. . 0
	1.8	K	15.0 x 25.0 x 31.5	12.3	85	F1778	518	K	.	K	. . 0
	2.2	K / M	15.0 x 25.0 x 31.5	12.3	85	F1778	522	.	.	K	. . 0
	2.7	K	18.0 x 28.0 x 31.5	16.1	100	F1778	527	K	.	K	. . 0
	3.3	K	21.0 x 31.0 x 31.0	20.3	70	F1778	533	K	.	K	. . 0
	3.3	M	18.0 x 28.0 x 31.5	16.1	80	F1778	533	M	.	K	. . 0
	3.9	K	21.0 x 31.0 x 31.0	20.3	50	F1778	539	K	.	K	. . 0
	4.7	M	21.0 x 31.0 x 31.0	20.3	50	F1778	547	M	.	K	. . 0

Notes

- SPQ = Standard Packing Quantity
- For detailed tape specifications refer to packaging information: www.vishay.com/doc?28139

(1) For further packaging see table "Composition of Catalog Number"

(2) Further information about packaging quantities with different lead length and / or taped versions, see document "Packing Quantities" www.vishay.com/doc?27608

(3) Weight for short lead product only

For technical questions, contact: rfi@vishay.com
THIS DOCUMENT IS SUBJECT TO CHANGE WITHOUT NOTICE. THE PRODUCTS DESCRIBED HEREIN AND THIS DOCUMENT ARE SUBJECT TO SPECIFIC DISCLAIMERS, SET FORTH AT www.vishay.com/doc?91000

APPROVALS				
SAFETY APPROVALS X2	**VOLTAGE**	**VALUE**	**FILE NUMBERS**	**LINKS**
EN 60384-14 (ENEC) (= IEC 60384-14 ed-4 (2013))	310 V_{AC}	1 nF to 4.7 µF	ENEC16/FI/21/01054/A2	www.vishay.com/doc?28179
UL 60384-14	310 V_{AC}	1 nF to 4.7 µF	E354331	www.vishay.com/doc?28184
CSA-E384-14	310 V_{AC}	1 nF to 4.7 µF	E354331	
CQC	310 V_{AC}	1 nF to 4.7 µF	CQC08001026060 (F)	www.vishay.com/doc?27624
			CQC08001026061 (L)	www.vishay.com/doc?27625
CB test certificate	310 V_{AC}	1 nF to 4.7 µF	FI-39827/A1	www.vishay.com/doc?28175
The ENEC-approval together with the CB-certificate replace all national marks of the following countries (they have already signed the ENEC-agreement): Austria; Belgium; Czech Republic; Denmark; Finland; France; Germany; Greece; Hungary; Ireland; Italy; Luxembourg; Netherlands; Norway; Portugal; Slovenian; Spain; Sweden; Switzerland and United Kingdom.				

MOUNTING

Normal Use

The capacitors are designed for mounting on printed-circuit boards. The capacitors packed in bandoleers are designed for mounting in printed circuit boards by means of automatic insertion machines.

For detailed tape specifications refer to Packaging Information: www.vishay.com/doc?28139

Specific Method of Mounting to Withstand Vibration and Shock

In order to withstand vibration and shock tests, it must be ensured that the stand-off pips are in good contact with the printed-circuit board:

- For pitches ≤ 15 mm capacitors shall be mechanically fixed by the leads
- For larger pitches the capacitors shall be mounted in the same way and the body clamped in addition

Space Requirements on Printed Circuit-Board

The maximum space for length ($l_{max.}$), width ($w_{max.}$), and height ($h_{max.}$) of film capacitors to take in account on the printed circuit board is shown in the drawings:

- For products with pitch ≤ 15 mm, Δw x Δl = 0.3 mm and Δh = 0.1 mm
- For products with 15 mm < pitch ≤ 27.5 mm, Δw x Δl = 0.5 mm and Δh = 0.1 mm
- For products with pitch = 37.5 mm, Δw x Δl = 0.7 mm and Δh = 0.5 mm

Eccentricity defined as in drawing. The maximum eccentricity is smaller than or equal to the lead diameter of the product concerned.

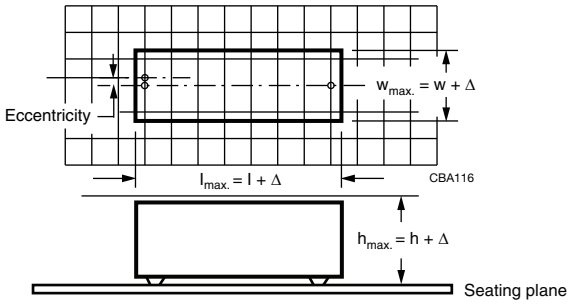

For technical questions, contact: rfi@vishay.com
THIS DOCUMENT IS SUBJECT TO CHANGE WITHOUT NOTICE. THE PRODUCTS DESCRIBED HEREIN AND THIS DOCUMENT ARE SUBJECT TO SPECIFIC DISCLAIMERS, SET FORTH AT www.vishay.com/doc?91000

SOLDERING CONDITIONS

For general soldering conditions and wave soldering profile, we refer to the application note:
"Soldering Guideline for Film Capacitors": www.vishay.com/doc?28171

Storage Temperature

T_{stg} = -25 °C to +35 °C with RH maximum 75 % without condensation

Ratings and Characteristics Reference Conditions

Unless otherwise specified, all electrical values apply to an ambient free air temperature of 23 °C ± 1 °C, an atmospheric pressure of 86 kPa to 106 kPa and a relative humidity of 50 % ± 2 %.

For reference testing, a conditioning period shall be applied over 96 h ± 4 h by heating the products in a circulating air oven at the rated temperature and a relative humidity not exceeding 20 %.

CHARACTERISTICS

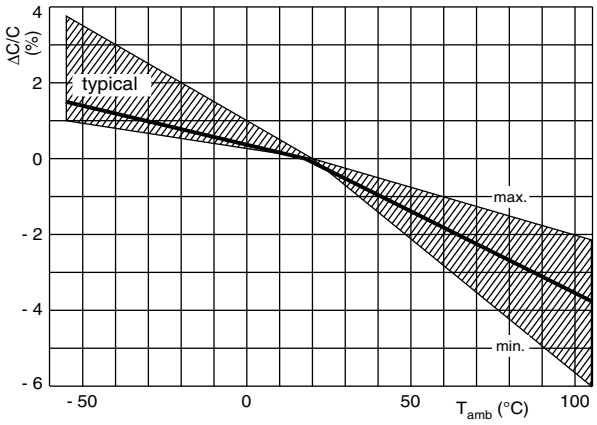

Capacitance as a function of ambient temperature
(typical curve)

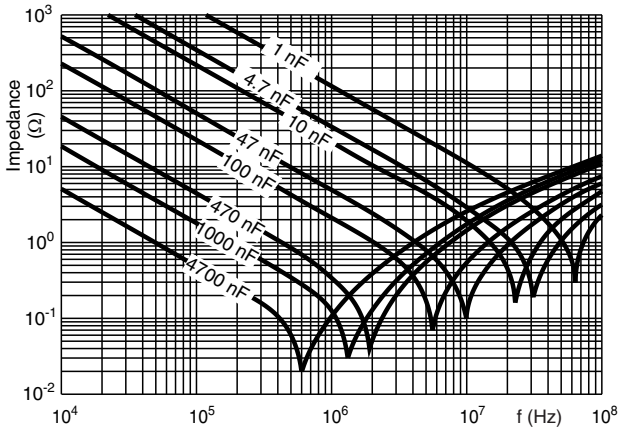

Impedance as a function of frequency
(typical curve)

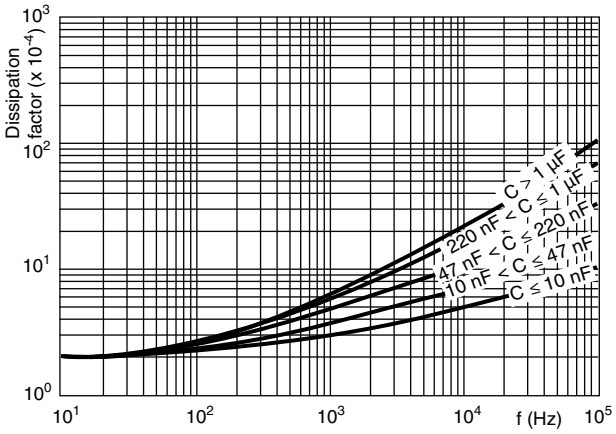

Tangent of loss angle as a function of frequency
(typical curve)

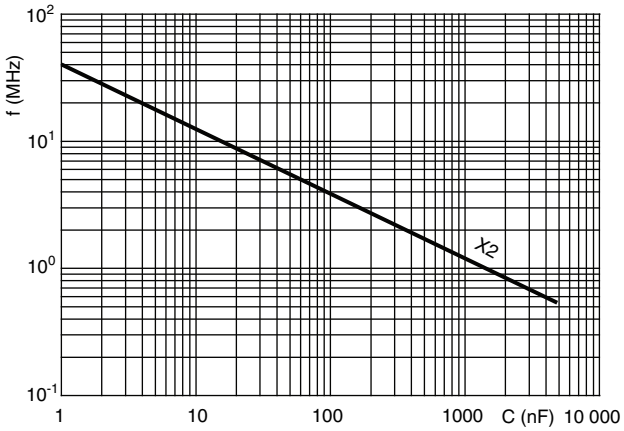

Resonant frequency as a function of capacitance
(typical curve)

For technical questions, contact: rfi@vishay.com
THIS DOCUMENT IS SUBJECT TO CHANGE WITHOUT NOTICE. THE PRODUCTS DESCRIBED HEREIN AND THIS DOCUMENT ARE SUBJECT TO SPECIFIC DISCLAIMERS, SET FORTH AT www.vishay.com/doc?91000

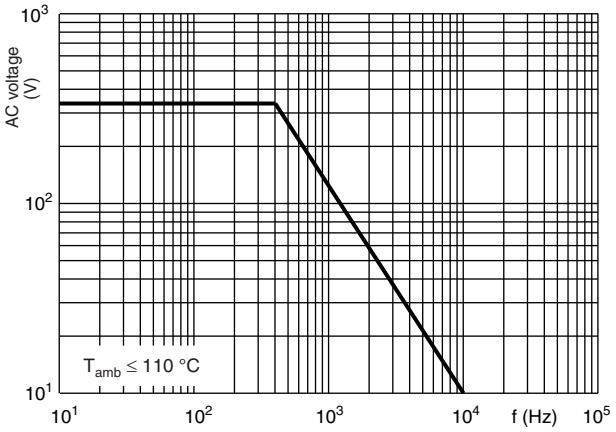

Max. RMS voltage as a function of frequency
(typical curve)

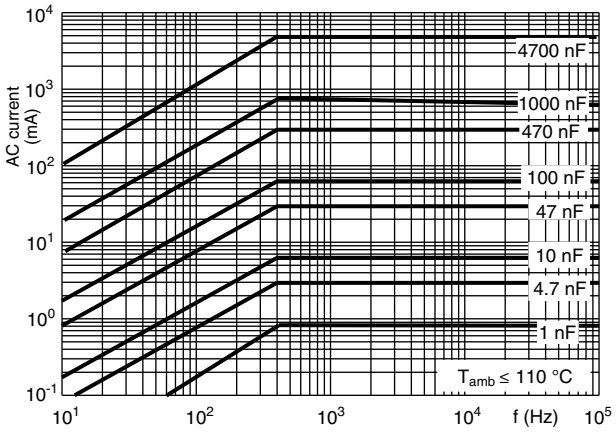

Max. RMS current as a function of frequency
(typical curve)

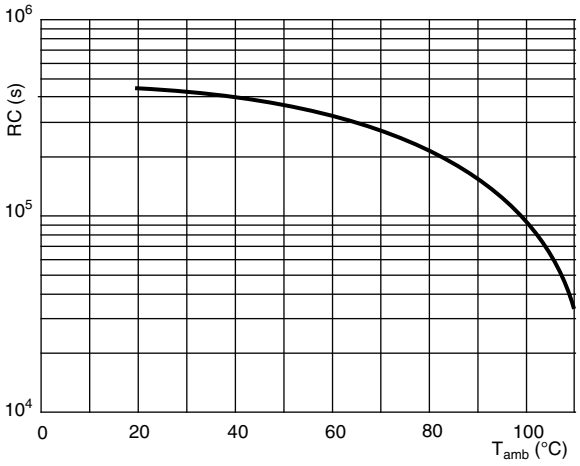

Insulation resistance as a function of ambient temperature
(typical curve)

APPLICATION NOTES

- For X2 electromagnetic interference suppression in **standard across the line applications** (50 Hz / 60 Hz) with a maximum mains voltage of 310 V_{AC}.
- For series impedance applications we refer to application note www.vishay.com/doc?28153
- For capacitors connected in parallel, normally the proof voltage and possibly the rated voltage must be reduced. For information depending of the capacitance value and the number of parallel connections contact: rfi@vishay.com
- These capacitors are not intended for continuous pulse applications. For these situations, capacitors of the AC and pulse programs must be used.
- The maximum ambient temperature must not exceed 110 °C (125 °C for less than 1000 h) for C ≤ 470 nF and 110 °C for C > 470 nF.
- Rated voltage pulse slope:
  if the pulse voltage is lower than the rated voltage, the values of the specific reference data can be multiplied by 435 V_{DC} and divided by the applied voltage.

THIS DOCUMENT IS SUBJECT TO CHANGE WITHOUT NOTICE. THE PRODUCTS DESCRIBED HEREIN AND THIS DOCUMENT ARE SUBJECT TO SPECIFIC DISCLAIMERS, SET FORTH AT www.vishay.com/doc?91000

INSPECTION REQUIREMENTS

General Notes

Sub-clause numbers of tests and performance requirements refer to the "Sectional Specification, IEC Publication IEC 60384-14 ed-4 (2013) and Specific Reference Data".

GROUP C INSPECTION REQUIREMENTS		
SUB-CLAUSE NUMBER AND TEST	**CONDITIONS**	**PERFORMANCE REQUIREMENTS**
SUB-GROUP C1A PART OF SAMPLE OF SUB-GROUP C1		
4.1 Dimensions (detail)		As specified in section "General Data" of this specification
Initial measurements	Capacitance Tangent of loss angle: for C ≤ 1 μF at 10 kHz for C > 1 μF at 1 kHz	
4.3 Robustness of terminations	Tensile: load 10 N; 10 s Bending: load 5 N; 4 x 90°	No visible damage
4.4 Resistance to soldering heat	No pre-drying Method: 1A Solder bath: 280 °C ± 5 °C Duration: 10 s	
4.19 Component solvent resistance	Isopropylalcohol at room temperature Method: 2 Immersion time: 5 min ± 0.5 min Recovery time: min. 1 h, max. 2 h	
4.4.2 Final measurements	Visual examination	No visible damage Legible marking
	Capacitance	$\lvert\Delta C/C\rvert \leq 5$ % of the value measured initially.
	Tangent of loss angle	Increase of tan δ: ≤ 0.008 for: C ≤ 1 μF or ≤ 0.005 for: C > 1 μF Compared to values measured initially.
	Insulation resistance	As specified in section "Insulation Resistance" of this specification
SUB-GROUP C1B PART OF SAMPLE OF SUB-GROUP C1		
Initial measurements	Capacitance Tangent of loss angle: for C ≤ 1 μF at 10 kHz for C > 1 μF at 1 kHz	
4.20 Solvent resistance of the marking	Isopropylalcohol at room temperature Method: 1 Rubbing material: cotton wool Immersion time: 5 min ± 0.5 min	No visible damage Legible marking
4.6 Rapid change of temperature	θA = -55 °C θB = +110 °C 5 cycles Duration t = 30 min	
4.6.1 Inspection	Visual examination	No visible damage
4.7 Vibration	Mounting: see section "Mounting" of this specification Procedure B4 Frequency range: 10 Hz to 55 Hz Amplitude: 0.75 mm or Acceleration 98 m/s² (whichever is less severe) Total duration 6 h	

For technical questions, contact: rfi@vishay.com
THIS DOCUMENT IS SUBJECT TO CHANGE WITHOUT NOTICE. THE PRODUCTS DESCRIBED HEREIN AND THIS DOCUMENT ARE SUBJECT TO SPECIFIC DISCLAIMERS, SET FORTH AT www.vishay.com/doc?91000

GROUP C INSPECTION REQUIREMENTS		
SUB-CLAUSE NUMBER AND TEST	**CONDITIONS**	**PERFORMANCE REQUIREMENTS**
SUB-GROUP C1B PART OF SAMPLE OF SUB-GROUP C1		
4.7.2 Final inspection	Visual examination	No visible damage
4.9 Shock	Mounting: see section “Mounting” for more information Pulse shape: half sine Acceleration: 490 m/s² Duration of pulse: 11 ms	
4.9.2 Final measurements	Visual examination	No visible damage
	Capacitance	$\lvert\Delta C/C\rvert \leq 5$ % of the value measured initially.
	Tangent of loss angle	Increase of tan δ: ≤ 0.008 for: C ≤ 1 μF or ≤ 0.005 for: C > 1 μF Compared to values measured initially.
	Insulation resistance	As specified in section “Insulation Resistance” of this specification
SUB-GROUP C1 COMBINED SAMPLE OF SPECIMENS OF SUB-GROUPS C1A AND C1B		
4.11 Climatic sequence		
4.11.1 Initial measurements	Capacitance measured in 4.4.2 and 4.9.2 Tangent of loss angle: measured initially in C1A and C1B	
4.11.2 Dry heat	Temperature: 110 °C	
4.11.3 Damp heat cyclic Test Db First cycle	Duration: 16 h	
4.11.4 Cold	Temperature: -55 °C	
4.11.5 Damp heat cyclic Test Db Remaining cycles	Duration: 2 h	
4.11.6 Final measurements	Visual examination	No visible damage Legible marking
	Capacitance	$\lvert\Delta C/C\rvert \leq 5$ % of the value measured in 4.11.1.
	Tangent of loss angle	Increase of tan δ: ≤ 0.008 for: C ≤ 1 μF or ≤ 0.005 for: C > 1 μF Compared to values measured in 4.11.1.
	Voltage proof 1350 V_{DC}; 1 min between terminations	No permanent breakdown or flash-over
	Insulation resistance	≥ 50 % of values specified in section “Insulation Resistance” of this specification
SUB-GROUP C2		
4.12 Damp heat steady state	56 days; 40 °C; 90 % to 95 % RH no load	
4.12.1 Initial measurements	Capacitance Tangent of loss angle: at 1 kHz	
4.12.3 Final measurements	Visual examination	No visible damage Legible marking
	Capacitance	$\lvert\Delta C/C\rvert \leq 5$ % of the value measured in 4.12.1.

For technical questions, contact: rfi@vishay.com
THIS DOCUMENT IS SUBJECT TO CHANGE WITHOUT NOTICE. THE PRODUCTS DESCRIBED HEREIN AND THIS DOCUMENT ARE SUBJECT TO SPECIFIC DISCLAIMERS, SET FORTH AT www.vishay.com/doc?91000

GROUP C INSPECTION REQUIREMENTS		
SUB-CLAUSE NUMBER AND TEST	**CONDITIONS**	**PERFORMANCE REQUIREMENTS**
SUB-GROUP C2		
4.12.3 Final measurements	Tangent of loss angle	Increase of tan δ: ≤ 0.008 for: C ≤ 1 μF or ≤ 0.005 for: C > 1 μF Compared to values measured in 4.12.1.
	Voltage proof 1350 V_{DC}; 1 min between terminations	No permanent breakdown or flash-over
	Insulation resistance	≥ 50 % of values specified in section "Insulation Resistance" of this specification
SUB-GROUP C3		
4.13.1 Initial measurements	Capacitance Tangent of loss angle: for C ≤ 1 μF at 10 kHz for C > 1 μF at 1 kHz	
4.13 Impulse voltage	3 successive impulses, full wave, peak voltage: X2: 2.5 kV for C ≤ 1 μF X2: 2.5 kV/√C for C > 1 μF Max. 24 pulses	No self healing, breakdowns or flash-over
4.14 Endurance	Duration: 1000 h 1.25 x U_{RAC} at 110 °C Once in every hour the voltage is increased to 1000 V_{RMS} for 0.1 s via resistor of 47 Ω ± 5 %	
4.14.7 Final measurements	Visual examination	No visible damage Legible marking
	Capacitance	|ΔC/C| ≤ 10 % compared to values measured in 4.13.1.
	Tangent of loss angle	Increase of tan δ: ≤ 0.008 for: C ≤ 1 μF or ≤ 0.005 for: C > 1 μF Compared to values measured in 4.13.1.
	Voltage proof 1350 V_{DC}; 1 min between terminations 2120 V_{AC}; 1 min between terminations and case	No permanent breakdown or flash-over
	Insulation resistance	≥ 50 % of values specified in section "Insulation Resistance" of this specification
SUB-GROUP C4		
4.15 Charge and discharge	10 000 cycles Charged to 435 V_{DC} Discharge resistance: $R = \frac{435\ V_{DC}}{1.25 \times C\ (dU/dt)}$	
4.15.1 Initial measurements	Capacitance Tangent of loss angle: for C ≤ 1 μF at 10 kHz for C > 1 μF at 1 kHz	
4.15.3 Final measurements	Capacitance	|ΔC/C| ≤ 10 % compared to values measured in 4.15.1.
	Tangent of loss angle	Increase of tan δ: ≤ 0.008 for: C ≤ 1 μF or ≤ 0.005 for: C > 1 μF Compared to values measured in 4.15.1.
	Insulation resistance	≥ 50 % of values specified in section "Insulation Resistance" of this specification

For technical questions, contact: rfi@vishay.com
THIS DOCUMENT IS SUBJECT TO CHANGE WITHOUT NOTICE. THE PRODUCTS DESCRIBED HEREIN AND THIS DOCUMENT ARE SUBJECT TO SPECIFIC DISCLAIMERS, SET FORTH AT www.vishay.com/doc?91000

GROUP C INSPECTION REQUIREMENTS		
SUB-CLAUSE NUMBER AND TEST	**CONDITIONS**	**PERFORMANCE REQUIREMENTS**
SUB-GROUP C5		
4.16 Radio frequency characteristic	Resonance frequency	≥ 0.9 times the value as specified in section "Resonant Frequency" of this specification.
SUB-GROUP C6		
4.17 Passive flammability Class B	Bore of gas jet: Ø 0.5 mm Fuel: butane Test duration for actual volume V in mm^3: V ≤ 250: 10 s 250 < V ≤ 500: 20 s 500 < V ≤ 1750: 30 s V > 1750: 60 s One flame application 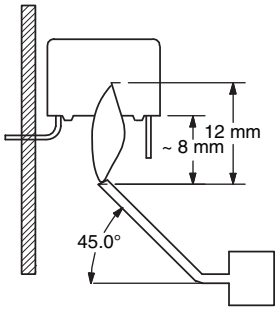 	After removing test flame from capacitor, the capacitor must not continue to burn for more than 10 s. No burning particle must drop from the sample.
SUB-GROUP C7		
4.18 Active flammability	20 cycles of 2.5 kV discharges on the test capacitor connected to U_{RAC}.	The cheese cloth around the capacitors shall not burn with a flame. No electrical measurements are required.
SUB-GROUP ADD1		
A.1 Damp heat steady state with voltage	RH: 40 %; temp.: 93 °C, voltage: 300 V_{AC} Duration: 21 days	
A.1.1 Initial measurements	Capacitance Tangent of loss angle: at 10 kHz	
A.1.2 Final measurements	Visual examination	No visible damage Legible marking
	Capacitance	$\lvert\Delta C/C\rvert \leq 10$ % of the value with initial measurement A.1.1
	Tangent of loss angle	Increase of tan $\delta \leq 0.024$ Compared to values with initial measurement A.1.1
	Insulation resistance	≥ 50 % of values specified in section "Insulation Resistance" of this specification

For technical questions, contact: rfi@vishay.com
THIS DOCUMENT IS SUBJECT TO CHANGE WITHOUT NOTICE. THE PRODUCTS DESCRIBED HEREIN AND THIS DOCUMENT ARE SUBJECT TO SPECIFIC DISCLAIMERS, SET FORTH AT www.vishay.com/doc?91000

Disclaimer

ALL PRODUCT, PRODUCT SPECIFICATIONS AND DATA ARE SUBJECT TO CHANGE WITHOUT NOTICE TO IMPROVE RELIABILITY, FUNCTION OR DESIGN OR OTHERWISE.

Vishay Intertechnology, Inc., its affiliates, agents, and employees, and all persons acting on its or their behalf (collectively, “Vishay”), disclaim any and all liability for any errors, inaccuracies or incompleteness contained in any datasheet or in any other disclosure relating to any product.

Vishay makes no warranty, representation or guarantee regarding the suitability of the products for any particular purpose or the continuing production of any product. To the maximum extent permitted by applicable law, Vishay disclaims (i) any and all liability arising out of the application or use of any product, (ii) any and all liability, including without limitation special, consequential or incidental damages, and (iii) any and all implied warranties, including warranties of fitness for particular purpose, non-infringement and merchantability.

Statements regarding the suitability of products for certain types of applications are based on Vishay's knowledge of typical requirements that are often placed on Vishay products in generic applications. Such statements are not binding statements about the suitability of products for a particular application. It is the customer's responsibility to validate that a particular product with the properties described in the product specification is suitable for use in a particular application. Parameters provided in datasheets and / or specifications may vary in different applications and performance may vary over time. All operating parameters, including typical parameters, must be validated for each customer application by the customer's technical experts. Product specifications do not expand or otherwise modify Vishay's terms and conditions of purchase, including but not limited to the warranty expressed therein.

Hyperlinks included in this datasheet may direct users to third-party websites. These links are provided as a convenience and for informational purposes only. Inclusion of these hyperlinks does not constitute an endorsement or an approval by Vishay of any of the products, services or opinions of the corporation, organization or individual associated with the third-party website. Vishay disclaims any and all liability and bears no responsibility for the accuracy, legality or content of the third-party website or for that of subsequent links.

Except as expressly indicated in writing, Vishay products are not designed for use in medical, life-saving, or life-sustaining applications or for any other application in which the failure of the Vishay product could result in personal injury or death. Customers using or selling Vishay products not expressly indicated for use in such applications do so at their own risk. Please contact authorized Vishay personnel to obtain written terms and conditions regarding products designed for such applications.

No license, express or implied, by estoppel or otherwise, to any intellectual property rights is granted by this document or by any conduct of Vishay. Product names and markings noted herein may be trademarks of their respective owners.

© 2024 VISHAY INTERTECHNOLOGY, INC. ALL RIGHTS RESERVED