CUI INC
a bel group

SERIES: VOF-10 | DESCRIPTION: AC-DC POWER SUPPLY

DISCONTINUED

FEATURES

- up to 10 W continuous power
- compact size
- universal input (85~264 Vac / 120~375 Vdc)
- single output from 3.3~48 Vdc
- no minimum load required
- 3000 Vac isolation
- over current, over voltage, and short circuit protections
- UL/cUL and TUV 60950-1 safety approvals
- no load power consumption < 0.5 W
- efficiency up to 78%

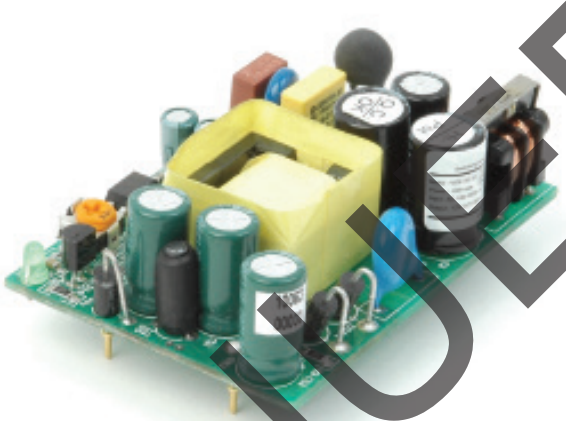

MODEL	output voltage (Vdc)	output current max (A)	output power max (W)	ripple[1] and noise max (mVp-p)	efficiency typ (%)
VOF-10-3.3	3.3	2.4	8	100	70
VOF-10-5*	5	2.0	10	100	75
VOF-10-9*	9	1.11	10	120	75
VOF-10-12	12	0.83	10	120	75
VOF-10-15	15	0.67	10	150	75
VOF-10-24*	24	0.42	10	240	78
VOF-10-48*	48	0.21	10	480	78

Notes: 1. Ripple & noise are measured at 20 MHz BW with 47 µF ceramic and 100 nF electrolytic capacitors on the output
*. Discontinued.

PART NUMBER KEY

VOF-10 - XX

Base Number — Output Voltage

DISCONTINUED

INPUT

parameter	conditions/description	min	typ	max	units
voltage		85 120		264 375	Vac Vdc
frequency		47		63	Hz
input current				0.6	A
inrush current	110 Vac, full load, cold start 220 Vac, full load, cold start			15 30	A A
input fuse	built-in, non-user serviceable				

OUTPUT

parameter	conditions/description	min	typ	max	units
line regulation	3.3 Vdc model all other models		±0.6 ±0.5		% %
load regulation	3.3 Vdc model all other models		±1.2 ±1		% %
temperature coefficient			±0.05		%/°C
hold-up time	at 115 Vac, full load		16		ms
adjustability	adjustable with built-in trim pot		±5		%
switching frequency			100		kHz
no load power consumption	48 Vdc model all other models			0.7 0.5	W W

PROTECTIONS

parameter	conditions/description	min	typ	max	units
over voltage protection	clamped by TVS				
over current protection	automatically recovers		105		%
short circuit protection	protected, long term short circuit may reduce reliability				

SAFETY & COMPLIANCE

parameter	conditions/description	min	typ	max	units
isolation voltage	input to output at 10 mA for 1 minute		3,000		Vac
isolation resistance	input to output at 500 Vdc at 25°C	50			MΩ
safety approvals	TUV EN 60950, UL/cUL 60950-1				
EMI/EMC	FCC class B, EN 55022 class B, CE				
leakage current				0.25	mA
RoHS	2011/65/EU				
MTBF	according to MIL-HDBK-217F	250,000			hours

ENVIRONMENTAL

parameter	conditions/description	min	typ	max	units
operating temperature	see derating curve	0		60	°C
storage temperature		-20		85	°C
operating humidity	non-condensing	20		90	%
storage humidity	non-condensing	20		90	%

MECHANICAL

parameter	conditions/description	min	typ	max	units
dimensions	65 x 45 x 18.5 (2.56 x 1.77 x 0.73 inches)				mm
cooling method	free air convection (see derating curve below)				

DERATING CURVES

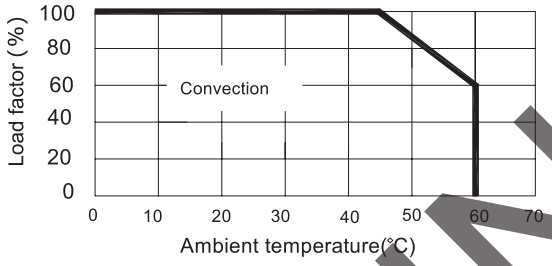

MOUNTING METHOD

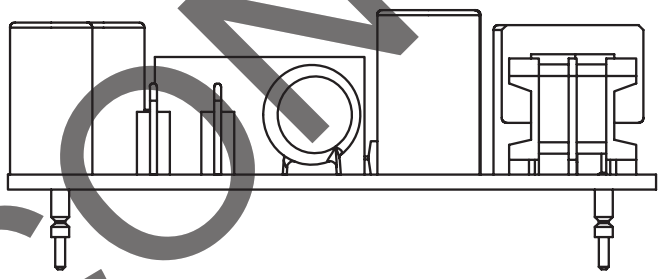

Horizontal
(performance evaluations conducted under this mounting method)

DISCONTINUED

MECHANICAL DRAWING

units: mm [inches]
tolerance: ±0.3 [±0.01]
unless otherwise noted

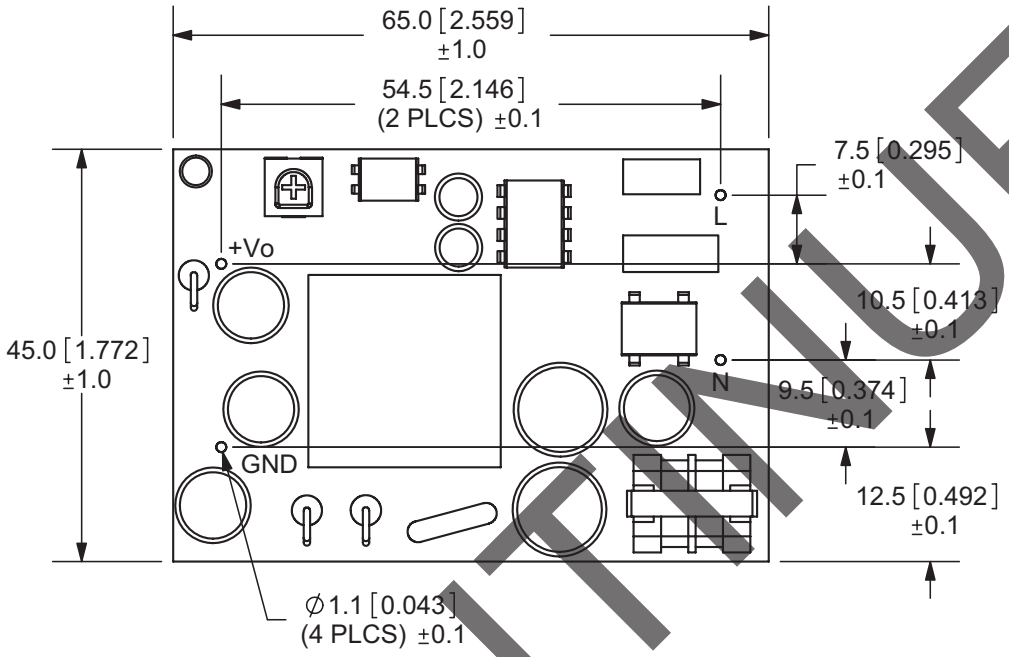

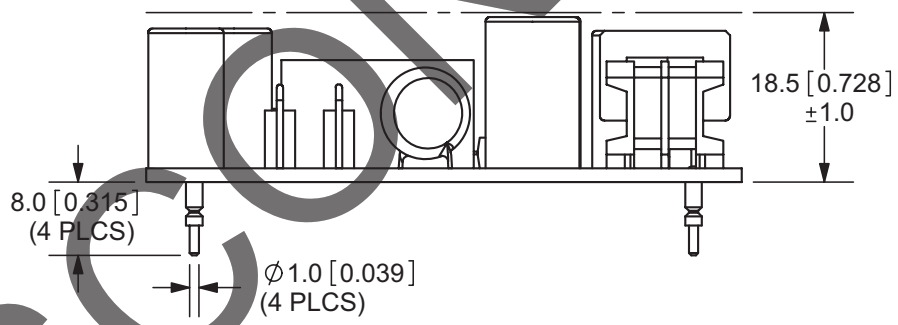

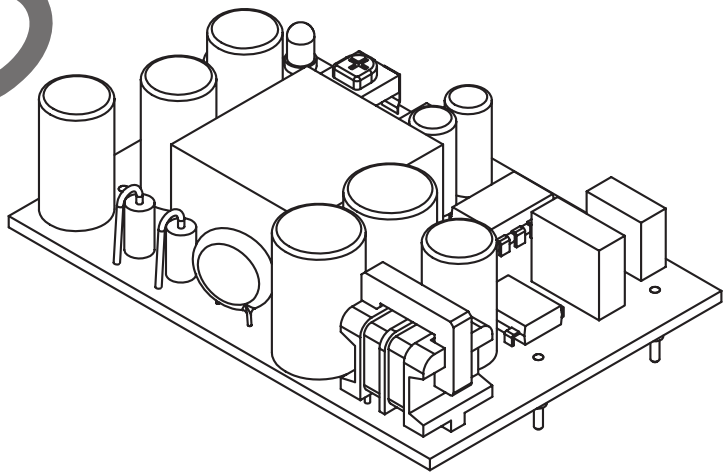

DISCONTINUED

REVISION HISTORY

rev.	description	date
1.0	initial release	03/18/2010
1.01	new template applied	05/13/2011
1.02	added MTBF data	09/20/2011
1.03	V-Infinity branding removed	08/21/2012
1.04	discontinued 9 & 48 Vdc models	12/29/2015
1.05	company logo updated	12/03/2020
1.06	discontinued models VOF-10-5 & VOF-10-24	02/09/2023

The revision history provided is for informational purposes only and is believed to be accurate.

DISCONTINUED

CUI INC
a bel group

Headquarters
20050 SW 112th Ave.
Tualatin, OR 97062
800.275.4899

Fax 503.612.2383
cui.com
techsupport@cui.com

CUI offers a two (2) year limited warranty. Complete warranty information is listed on our website.

CUI reserves the right to make changes to the product at any time without notice. Information provided by CUI is believed to be accurate and reliable. However, no responsibility is assumed by CUI for its use, nor for any infringements of patents or other rights of third parties which may result from its use.

CUI products are not authorized or warranted for use as critical components in equipment that requires an extremely high level of reliability. A critical component is any component of a life support device or system whose failure to perform can be reasonably expected to cause the failure of the life support device or system, or to affect its safety or effectiveness.