CUDEVICES



# **MODEL:** CST-931RP-A | **DESCRIPTION:** MAGNETIC BUZZER TRANSDUCER

## FEATURES

- side port
- SPL 85 dB
- low profile

RoHS

## SPECIFICATIONS

| parameter | conditions/description | min | typ | max | units |
|---|---|---|---|---|---|
| rated voltage | | | 3.0 | | Vo-p |
| operating voltage | | 2.0 | | 4.0 | Vo-p |
| current consumption | at rated voltage, 2,730 Hz square wave, ½ duty | | | 80 | mA |
| coil resistance | | 12.7 | 15.0 | 17.3 | Ω |
| sound pressure level | at 10 cm | 85 | 92 | | dB |
| rated frequency | | | 2,730 | | Hz |
| dimensions | ø9.0 x H4.5 | | | | mm |
| weight | | | 0.6 | | g |
| material | PPO (black) | | | | |
| terminal | pin type (Au plating) | | | | |
| operating temperature | | -20 | | 60 | °C |
| storage temperature | | -30 | | 70 | °C |
| RoHS | yes | | | | |

## MECHANICAL DRAWING

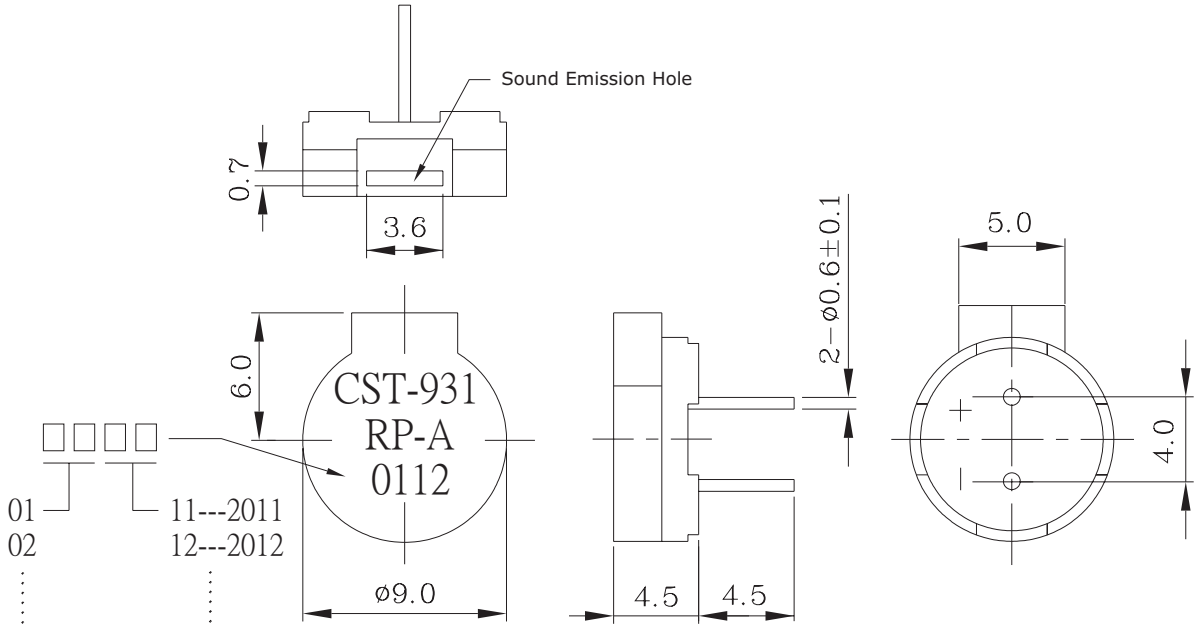

## FREQUENCY RESPONSE CURVE

A: frequency response. Magn dB re 20.00µPA

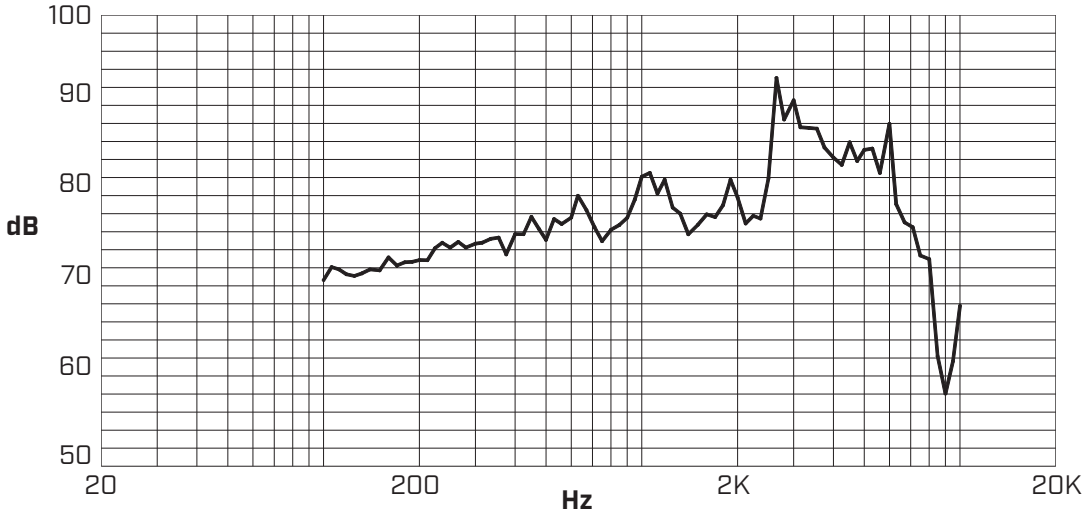


## MEASUREMENT METHOD

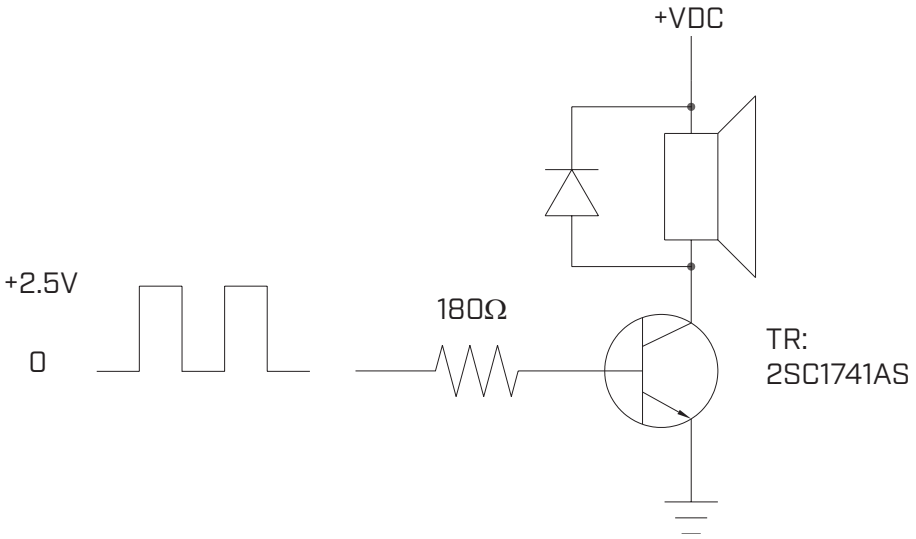

## REVISION HISTORY

| rev. | description | date |
|---|---|---|
| 1.0 | initial release | 01/30/2006 |
| 1.01 | updated template and model number | 04/24/2012 |
| 1.02 | logo, datasheet style update | 08/05/2022 |

The revision history provided is for informational purposes only and is believed to be accurate.

CUI Devices offers a one (1) year limited warranty. Complete warranty information is listed on our website.

CUI Devices reserves the right to make changes to the product at any time without notice. Information provided by CUI Devices is believed to be accurate and reliable. However, no responsibility is assumed by CUI Devices for its use, nor for any infringements of patents or other rights of third parties which may result from its use.

CUI Devices products are not authorized or warranted for use as critical components in equipment that requires an extremely high level of reliability. A critical component is any component of a life support device or system whose failure to perform can be reasonably expected to cause the failure of the life support device or system, or to affect its safety or effectiveness.