Zener Diodes with Surge Current Specification

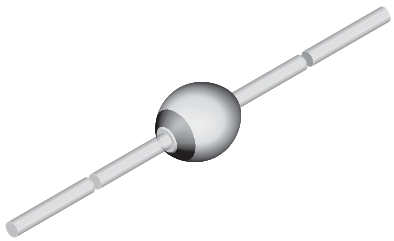

949539

FEATURES

- Glass passivated junction
- Hermetically sealed package
- Clamping time in picoseconds
- Material categorization: for definitions of compliance please see www.vishay.com/doc?99912

RoHS COMPLIANT
HALOGEN FREE

APPLICATIONS

- Medium power voltage regulators and medium power transient suppression circuits

ADDITIONAL RESOURCES

3D Models

PRIMARY CHARACTERISTICS		
PARAMETER	VALUE	UNIT
V_Z range nom.	6.2 to 300	V
Test current I_{ZT}	2 to 100	mA
V_Z specification	Pulse current	
Circuit configuration	Single	

ORDERING INFORMATION (Example)			
DEVICE NAME	ORDERING CODE	TAPED UNITS	MINIMUM ORDER QUANTITY
BZT03C6V2	BZT03C6V2-TR	5000 per 10" tape and reel	25 000
BZT03C6V2	BZT03C6V2-TAP	5000 per ammopack	25 000

PACKAGE				
PACKAGE NAME	WEIGHT	MOLDING COMPOUND FLAMMABILITY RATING	MOISTURE SENSITIVITY LEVEL	SOLDERING CONDITIONS
SOD-57	369 mg	UL 94 V-0	MSL level 1 (according J-STD-020)	Peak temperature max. 260 °C

ABSOLUTE MAXIMUM RATINGS (T_{amb} = 25 °C, unless otherwise specified)				
PARAMETER	TEST CONDITION	SYMBOL	VALUE	UNIT
Power dissipation	l = 10 mm, T_L = 25 °C	P_{tot}	3250	mW
	T_{amb} = 25 °C	P_{tot}	1300	
Repetitive peak reverse power dissipation		P_{ZRM}	10	W
Non repetitive peak surge power dissipation	t_p = 100 µs, T_j = 25 °C	P_{ZSM}	600	W
Junction to ambient air	l = 10 mm, T_L = constant	R_{thJA}	46	K/W
	On PC board with spacing 25 mm	R_{thJA}	100	
Junction temperature		T_j	175	°C
Storage temperature range		T_S	-65 to +175	°C
Forward voltage (max.)	I_F = 0.5 A	V_F	1.2	V

For technical questions within your region: DiodesAmericas@vishay.com, DiodesAsia@vishay.com, DiodesEurope@vishay.com
THIS DOCUMENT IS SUBJECT TO CHANGE WITHOUT NOTICE. THE PRODUCTS DESCRIBED HEREIN AND THIS DOCUMENT ARE SUBJECT TO SPECIFIC DISCLAIMERS, SET FORTH AT www.vishay.com/doc?91000

ELECTRICAL CHARACTERISTICS (T_{amb} = 25 °C, unless otherwise specified)

PART NUMBER	ZENER VOLTAGE RANGE			TEST CURRENT	REVERSE LEAKAGE CURRENT		DYNAMIC RESISTANCE		TEMPERATURE COEFFICIENT		CLAMPING (1)		STAND OFF (2)	
	V_Z at I_{ZT1}			I_{ZT1}	I_R at V_R		Z_Z at I_{ZT1}		TC_{VZ} at I_{ZT1}		$V_{(CL)R}$ at I_{RMS}		I_R at V_R	
	V			mA	µA	V	Ω		%/K		V	A	µA	V
	MIN.	NOM.	MAX.		MAX.		TYP.	MAX.	MIN.	MAX.	MAX.		MAX.	
BZT03C6V2	5.8	6.2	6.6	100	1500	4.7	1	2	0	0.07	9.3	34	3000	5.1
BZT03C6V8	6.4	6.8	7.2	100	1000	5.1	1	2	0	0.07	10.2	31	2000	5.6
BZT03C7V5	7	7.5	7.9	100	750	5.6	1	2	0	0.07	11.3	26.5	1500	6.2
BZT03C8V2	7.7	8.2	8.7	100	600	6.2	1	2	0.03	0.08	12.3	24.4	1200	6.8
BZT03C9V1	8.5	9.1	9.6	50	20	6.8	2	4	0.03	0.08	13.3	22.7	50	7.5
BZT03C10	9.4	10	10.6	50	10	7.5	2	4	0.05	0.09	14.8	20.3	20	8.2
BZT03C11	10.4	11	11.6	50	4	8.2	4	7	0.05	0.1	15.7	19.1	5	9.1
BZT03C12	11.4	12	12.7	50	3	9.1	4	7	0.05	0.1	17	17.7	5	10
BZT03C13	12.4	13	14.1	50	2	10	5	10	0.05	0.1	18.9	15.9	5	11
BZT03C15	13.8	15	15.6	50	1	11	5	10	0.05	0.1	20.9	14.4	5	12
BZT03C16	15.3	16	17.1	25	1	12	6	15	0.06	0.11	22.9	13.1	5	13
BZT03C18	16.8	18	19.1	25	1	13	6	15	0.06	0.11	25.6	11.7	5	15
BZT03C20	18.8	20	21.2	25	1	15	6	15	0.06	0.11	28.4	10.6	5	16
BZT03C22	20.8	22	23.3	25	1	16	6	15	0.06	0.11	31	9.7	5	18
BZT03C24	22.8	24	25.6	25	1	18	7	15	0.06	0.11	33.8	8.9	5	20
BZT03C27	25.1	27	28.9	25	1	20	7	15	0.06	0.11	38.1	7.9	5	22
BZT03C30	28	30	32	25	1	22	8	15	0.06	0.11	42.2	7.1	5	24
BZT03C33	31	33	35	25	1	24	8	15	0.06	0.11	46.2	6.5	5	27
BZT03C36	34	36	38	10	1	27	21	40	0.06	0.11	50.1	6	5	30
BZT03C39	37	39	41	10	1	30	21	40	0.06	0.11	54.1	5.5	5	33
BZT03C43	40	43	46	10	1	33	24	45	0.07	0.12	60.7	4.9	5	36
BZT03C47	44	47	50	10	1	36	24	45	0.07	0.12	65.5	4.6	5	39
BZT03C51	48	51	54	10	1	39	25	60	0.07	0.12	70.8	4.2	5	43
BZT03C56	52	56	60	10	1	43	25	60	0.07	0.12	78.6	3.8	5	47
BZT03C62	58	62	66	10	1	47	25	80	0.08	0.13	86.5	3.5	5	51
BZT03C68	64	68	72	10	1	51	25	80	0.08	0.13	94.4	3.2	5	56
BZT03C75	70	75	79	10	1	56	30	100	0.08	0.13	103.5	2.9	5	62
BZT03C82	77	82	87	10	1	62	30	100	0.08	0.13	114	2.6	5	68
BZT03C91	85	91	96	5	1	68	60	200	0.09	0.13	126	2.4	5	75
BZT03C100	94	100	106	5	1	75	60	200	0.09	0.13	139	2.2	5	82
BZT03C110	104	110	116	5	1	82	80	250	0.09	0.13	152	2	5	91
BZT03C120	114	120	127	5	1	91	80	250	0.09	0.13	167	1.8	5	100
BZT03C130	124	130	141	5	1	100	110	300	0.09	0.13	185	1.6	5	110
BZT03C150	138	150	156	5	1	110	130	300	0.09	0.13	204	1.5	5	120
BZT03C160	153	160	171	5	1	120	150	350	0.09	0.13	224	1.3	5	130
BZT03C180	168	180	191	5	1	130	180	400	0.09	0.13	249	1.2	5	150
BZT03C200	188	200	212	5	1	150	200	500	0.09	0.13	276	1.1	5	160
BZT03C220	208	220	233	2	1	160	350	750	0.09	0.13	305	1	5	180
BZT03C240	228	240	256	2	1	180	400	850	0.09	0.13	336	0.9	5	200
BZT03C270	251	270	289	2	1	200	450	1000	0.09	0.13	380	0.8	5	220
BZT03C300	280	300	320	2	1	220	450	1000	0.09	0.13	419	0.72	5	240

Notes

(1) 10/1000 exp. falling pulse t_p = 1000 µs down to 50 %

(2) Stand-off voltage = recommended suplly voltage

For technical questions within your region: DiodesAmericas@vishay.com, DiodesAsia@vishay.com, DiodesEurope@vishay.com
THIS DOCUMENT IS SUBJECT TO CHANGE WITHOUT NOTICE. THE PRODUCTS DESCRIBED HEREIN AND THIS DOCUMENT ARE SUBJECT TO SPECIFIC DISCLAIMERS, SET FORTH AT www.vishay.com/doc?91000

BASIC CHARACTERISTICS (T_{amb} = 25 °C, unless otherwise specified)

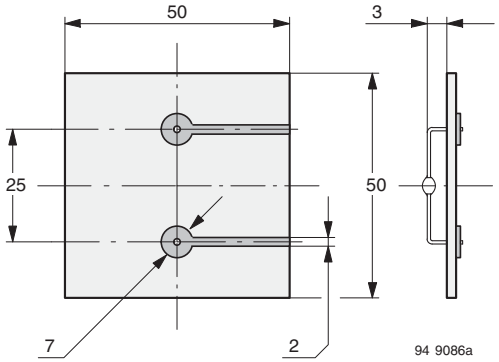

Fig. 1 - Epoxy Glass Hard Tissue, Board Thickness 1.5 mm, $R_{thJA} \leq 100$ K/W

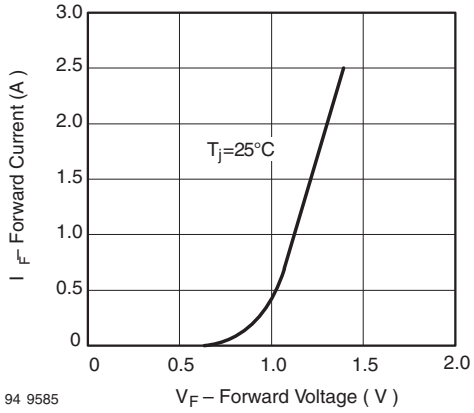

Fig. 3 - Forward Current vs. Forward Voltage

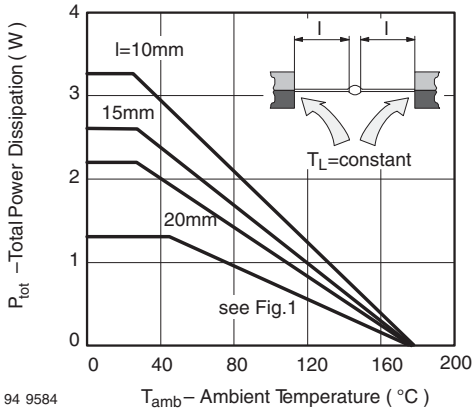

Fig. 2 - Total Power Dissipation vs. Ambient Temperature

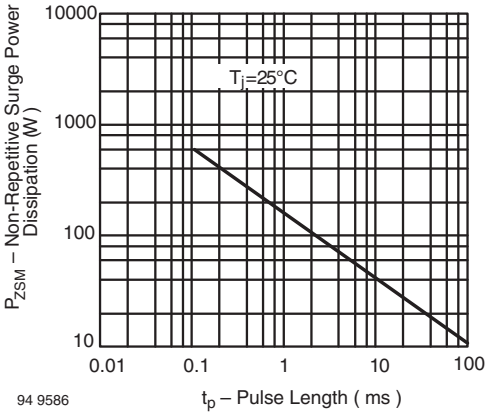

Fig. 4 - Non Repetitive Surge Power Dissipation vs. Pulse Length

PACKAGE DIMENSIONS in millimeters (inches): **SOD-57**

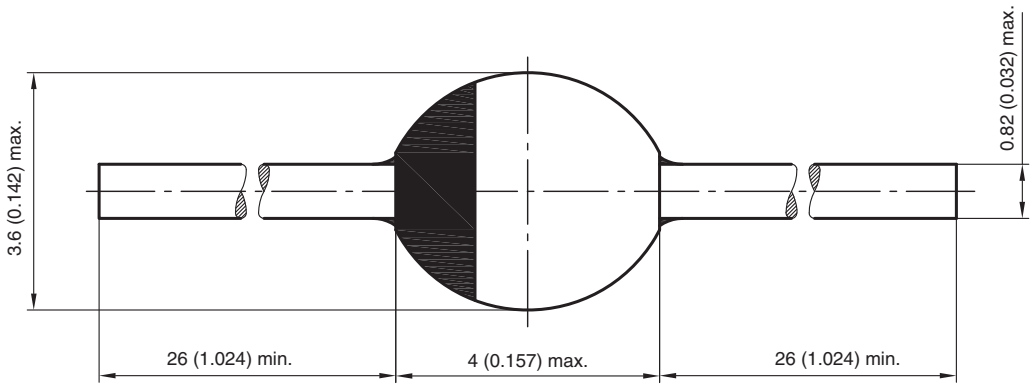

20543
Rev. 3 - Date: 09.February 2005
Document no.:6.563-5006.3-4

For technical questions within your region: DiodesAmericas@vishay.com, DiodesAsia@vishay.com, DiodesEurope@vishay.com
THIS DOCUMENT IS SUBJECT TO CHANGE WITHOUT NOTICE. THE PRODUCTS DESCRIBED HEREIN AND THIS DOCUMENT ARE SUBJECT TO SPECIFIC DISCLAIMERS, SET FORTH AT www.vishay.com/doc?91000

Disclaimer

ALL PRODUCT, PRODUCT SPECIFICATIONS AND DATA ARE SUBJECT TO CHANGE WITHOUT NOTICE TO IMPROVE RELIABILITY, FUNCTION OR DESIGN OR OTHERWISE.

Vishay Intertechnology, Inc., its affiliates, agents, and employees, and all persons acting on its or their behalf (collectively, “Vishay”), disclaim any and all liability for any errors, inaccuracies or incompleteness contained in any datasheet or in any other disclosure relating to any product.

Vishay makes no warranty, representation or guarantee regarding the suitability of the products for any particular purpose or the continuing production of any product. To the maximum extent permitted by applicable law, Vishay disclaims (i) any and all liability arising out of the application or use of any product, (ii) any and all liability, including without limitation special, consequential or incidental damages, and (iii) any and all implied warranties, including warranties of fitness for particular purpose, non-infringement and merchantability.

Statements regarding the suitability of products for certain types of applications are based on Vishay's knowledge of typical requirements that are often placed on Vishay products in generic applications. Such statements are not binding statements about the suitability of products for a particular application. It is the customer's responsibility to validate that a particular product with the properties described in the product specification is suitable for use in a particular application. Parameters provided in datasheets and / or specifications may vary in different applications and performance may vary over time. All operating parameters, including typical parameters, must be validated for each customer application by the customer's technical experts. Product specifications do not expand or otherwise modify Vishay's terms and conditions of purchase, including but not limited to the warranty expressed therein.

Hyperlinks included in this datasheet may direct users to third-party websites. These links are provided as a convenience and for informational purposes only. Inclusion of these hyperlinks does not constitute an endorsement or an approval by Vishay of any of the products, services or opinions of the corporation, organization or individual associated with the third-party website. Vishay disclaims any and all liability and bears no responsibility for the accuracy, legality or content of the third-party website or for that of subsequent links.

Except as expressly indicated in writing, Vishay products are not designed for use in medical, life-saving, or life-sustaining applications or for any other application in which the failure of the Vishay product could result in personal injury or death. Customers using or selling Vishay products not expressly indicated for use in such applications do so at their own risk. Please contact authorized Vishay personnel to obtain written terms and conditions regarding products designed for such applications.

No license, express or implied, by estoppel or otherwise, to any intellectual property rights is granted by this document or by any conduct of Vishay. Product names and markings noted herein may be trademarks of their respective owners.

© 2024 VISHAY INTERTECHNOLOGY, INC. ALL RIGHTS RESERVED