Freescale Semiconductor
Addendum

Document Number: QFN_Addendum
Rev. 0, 07/2014

Addendum for New QFN Package Migration

This addendum provides the changes to the 98A case outline numbers for products covered in this book. Case outlines were changed because of the migration from gold wire to copper wire in some packages. See the table below for the old (gold wire) package versus the new (copper wire) package.

To view the new drawing, go to Freescale.com and search on the new 98A package number for your device.

For more information about QFN package use, see EB806: *Electrical Connection Recommendations for the Exposed Pad on QFN and DFN Packages*.

© Freescale Semiconductor, Inc., 2014. All rights reserved.

Part Number	Package Description	Original (gold wire) package document number	Current (copper wire) package document number
MC68HC908JW32	48 QFN	98ARH99048A	98ASA00466D
MC9S08AC16			
MC9S908AC60			
MC9S08AC128			
MC9S08AW60			
MC9S08GB60A			
MC9S08GT16A			
MC9S08JM16			
MC9S08JM60			
MC9S08LL16			
MC9S08QE128			
MC9S08QE32			
MC9S08RG60			
MCF51CN128			
MC9RS08LA8	48 QFN	98ARL10606D	98ASA00466D
MC9S08GT16A	32 QFN	98ARH99035A	98ASA00473D
MC9S908QE32	32 QFN	98ARE10566D	98ASA00473D
MC9S908QE8	32 QFN	98ASA00071D	98ASA00736D
MC9S08JS16	24 QFN	98ARL10608D	98ASA00734D
MC9S08QB8			
MC9S08QG8	24 QFN	98ARL10605D	98ASA00474D
MC9S08SH8	24 QFN	98ARE10714D	98ASA00474D
MC9RS08KB12	24 QFN	98ASA00087D	98ASA00602D
MC9S08QG8	16 QFN	98ARE10614D	98ASA00671D
MC9RS08KB12	8 DFN	98ARL10557D	98ASA00672D
MC9S08QG8			
MC9RS08KA2	6 DFN	98ARL10602D	98ASA00735D

MC9S08GB60A
MC9S08GB32A
MC9S08GT60A
MC9S08GT32A

Data Sheet

HCS08
Microcontrollers

MC9S08GB60A
Rev. 2
07/2008

freescale.com

MC9S08GB60A Data Sheet

Covers: MC9S08GB60A
MC9S08GB32A
MC9S08GT60A
MC9S08GT32A

MC9S08GB60A
Rev. 2
07/2008

freescale™
semiconductor

Revision History

To provide the most up-to-date information, the revision of our documents on the World Wide Web will be the most current. Your printed copy may be an earlier revision. To verify you have the latest information available, refer to:

http://freescale.com

The following revision history table summarizes changes contained in this document.

Revision Number	Revision Date	Description of Changes
1.00	07/14/2005	Initial public release.
1.01	09/04/2007	Added a footnote to RTI of Table 3.2; Added RTI description to Section 3.5.6; Added a sentence "If active BDM mode is enabled in stop3, the internal RTI clock is not available." to the Section 5.7 Real Time Interrupt.
1.02	02/25/2008	Changed the Maximun Low Power of FBE and FEE in Table A-9 to 10 MHz. Changed the Title of Table 13-2 from “IIC1A Register Field Descriptions” to “IIC1F Register Field Descriptions”
2	7/30/2008	Added 42-pin SDIP information. Changed “However, when HGO=0, the maximum frequency is 8 MHz in FEE and FBE modes.” to “However, when HGO=0, the maximum frequency is 10 MHz in FEE and FBE modes.” in Appendix B5. Updated the “How to reach us” at backpage.

This product incorporates SuperFlash® technology licensed from SST.

Freescale, and the Freescale logo are trademarks of Freescale Semiconductor, Inc.
© Freescale Semiconductor, Inc., 2005-2008. All rights reserved.

List of Chapters

Chapter Number	Title	Page
Chapter 1	Device Overview	17
Chapter 2	Pins and Connections	23
Chapter 3	Modes of Operation	35
Chapter 4	Memory	43
Chapter 5	Resets, Interrupts, and System Configuration	65
Chapter 6	Parallel Input/Output	81
Chapter 7	Internal Clock Generator (S08ICGV2)	103
Chapter 8	Central Processor Unit (S08CPUV2)	129
Chapter 9	Keyboard Interrupt (S08KBIV1)	149
Chapter 10	Timer/PWM (S08TPMV1)	155
Chapter 11	Serial Communications Interface (S08SCIV1)	171
Chapter 12	Serial Peripheral Interface (S08SPIV3)	189
Chapter 13	Inter-Integrated Circuit (S08IICV1)	205
Chapter 14	Analog-to-Digital Converter (S08ATDV3)	223
Chapter 15	Development Support	239
Appendix A	Electrical Characteristics	261
Appendix B	EB652: Migrating from the GB60 Series to the GB60A Series	283
Appendix C	Ordering Information and Mechanical Drawings	287

Contents

Section Number **Title** **Page**

Chapter 1
Device Overview

1.1 Overview 17
1.2 Features 17
1.2.1 Standard Features of the HCS08 Family 17
1.2.2 Features of MC9S08GBxxA/GTxxA Series of MCUs 18
1.2.3 Devices in the MC9S08GBxxA/GTxxA Series 19
1.3 MCU Block Diagrams 19
1.4 System Clock Distribution 21

Chapter 2
Pins and Connections

2.1 Introduction 23
2.2 Device Pin Assignment 24
2.3 Recommended System Connections 27
2.3.1 Power 29
2.3.2 Oscillator 29
2.3.3 Reset 29
2.3.4 Background / Mode Select (PTG0/BKGD/MS) 30
2.3.5 General-Purpose I/O and Peripheral Ports 30
2.3.6 Signal Properties Summary 32

Chapter 3
Modes of Operation

3.1 Introduction 35
3.2 Features 35
3.3 Run Mode 35
3.4 Active Background Mode 35
3.5 Wait Mode 36
3.6 Stop Modes 36
3.6.1 Stop1 Mode 37
3.6.2 Stop2 Mode 37
3.6.3 Stop3 Mode 38
3.6.4 Active BDM Enabled in Stop Mode 38
3.6.5 LVD Enabled in Stop Mode 39
3.6.6 On-Chip Peripheral Modules in Stop Modes 39

Chapter 4
Memory

4.1 MC9S08GBxxA/GTxxA Memory Map 43
4.1.1 Reset and Interrupt Vector Assignments 43
4.2 Register Addresses and Bit Assignments 45
4.3 RAM 50
4.4 Flash 50
4.4.1 Features 51
4.4.2 Program and Erase Times 51
4.4.3 Program and Erase Command Execution 52
4.4.4 Burst Program Execution 53
4.4.5 Access Errors 55
4.4.6 Flash Block Protection 55
4.4.7 Vector Redirection 56
4.5 Security 56
4.6 Flash Registers and Control Bits 57
4.6.1 Flash Clock Divider Register (FCDIV) 57
4.6.2 Flash Options Register (FOPT and NVOPT) 59
4.6.3 Flash Configuration Register (FCNFG) 60
4.6.4 Flash Protection Register (FPROT and NVPROT) 60
4.6.5 Flash Status Register (FSTAT) 62
4.6.6 Flash Command Register (FCMD) 63

Chapter 5
Resets, Interrupts, and System Configuration

5.1 Introduction 65
5.2 Features 65
5.3 MCU Reset 65
5.4 Computer Operating Properly (COP) Watchdog 66
5.5 Interrupts 66
5.5.1 Interrupt Stack Frame 67
5.5.2 External Interrupt Request (IRQ) Pin 68
5.5.2.1 Pin Configuration Options 68
5.5.2.2 Edge and Level Sensitivity 69
5.5.3 Interrupt Vectors, Sources, and Local Masks 69
5.6 Low-Voltage Detect (LVD) System 71
5.6.1 Power-On Reset Operation 71
5.6.2 LVD Reset Operation 71
5.6.3 LVD Interrupt Operation 71
5.6.4 Low-Voltage Warning (LVW) 71
5.7 Real-Time Interrupt (RTI) 71
5.8 Reset, Interrupt, and System Control Registers and Control Bits 72
5.8.1 Interrupt Pin Request Status and Control Register (IRQSC) 73

5.8.2 System Reset Status Register (SRS) 74
5.8.3 System Background Debug Force Reset Register (SBDFR) 75
5.8.4 System Options Register (SOPT) 76
5.8.5 System Device Identification Register (SDIDH, SDIDL) 77
5.8.6 System Real-Time Interrupt Status and Control Register (SRTISC) 78
5.8.7 System Power Management Status and Control 1 Register (SPMSC1) 79
5.8.8 System Power Management Status and Control 2 Register (SPMSC2) 80

Chapter 6
Parallel Input/Output

6.1 Introduction 81
6.2 Features 83
6.3 Pin Descriptions 83
6.3.1 Port A and Keyboard Interrupts 83
6.3.2 Port B and Analog to Digital Converter Inputs 84
6.3.3 Port C and SCI2, IIC, and High-Current Drivers 84
6.3.4 Port D, TPM1 and TPM2 85
6.3.5 Port E, SCI1, and SPI 85
6.3.6 Port F and High-Current Drivers 86
6.3.7 Port G, BKGD/MS, and Oscillator 86
6.4 Parallel I/O Controls 87
6.4.1 Data Direction Control 87
6.4.2 Internal Pullup Control 87
6.4.3 Slew Rate Control 87
6.5 Stop Modes 88
6.6 Parallel I/O Registers and Control Bits 88
6.6.1 Port A Registers (PTAD, PTAPE, PTASE, and PTADD) 88
6.6.2 Port B Registers (PTBD, PTBPE, PTBSE, and PTBDD) 91
6.6.3 Port C Registers (PTCD, PTCPE, PTCSE, and PTCDD) 93
6.6.4 Port D Registers (PTDD, PTDPE, PTDSE, and PTDDD) 95
6.6.5 Port E Registers (PTED, PTEPE, PTESE, and PTEDD) 97
6.6.6 Port F Registers (PTFD, PTFPE, PTFSE, and PTFDD) 99
6.6.7 Port G Registers (PTGD, PTGPE, PTGSE, and PTGDD) 100

Chapter 7
Internal Clock Generator (S08ICGV2)

7.1 Introduction 105
7.1.1 Features 106
7.1.2 Modes of Operation 107
7.2 Oscillator Pins 107
7.2.1 EXTAL— External Reference Clock / Oscillator Input 107
7.2.2 XTAL— Oscillator Output 107

7.2.3 External Clock Connections 108
7.2.4 External Crystal/Resonator Connections 108
7.3 Functional Description 109
7.3.1 Off Mode (Off) 109
7.3.1.1 BDM Active 109
7.3.1.2 OSCSTEN Bit Set 109
7.3.1.3 Stop/Off Mode Recovery 109
7.3.2 Self-Clocked Mode (SCM) 109
7.3.3 FLL Engaged, Internal Clock (FEI) Mode 111
7.3.3.1 FLL Engaged Internal Unlocked 111
7.3.3.2 FLL Engaged Internal Locked 111
7.3.4 FLL Bypassed, External Clock (FBE) Mode 111
7.3.5 FLL Engaged, External Clock (FEE) Mode 111
7.3.5.1 FLL Engaged External Unlocked 112
7.3.5.2 FLL Engaged External Locked 112
7.3.6 FLL Lock and Loss-of-Lock Detection 112
7.3.7 FLL Loss-of-Clock Detection 113
7.3.8 Clock Mode Requirements 114
7.3.9 Fixed Frequency Clock 115
7.3.10 High Gain Oscillator 115
7.4 Initialization/Application Information 115
7.4.1 Introduction 115
7.4.2 Example #1: External Crystal = 32 kHz, Bus Frequency = 4.19 MHz 118
7.4.3 Example #2: External Crystal = 4 MHz, Bus Frequency = 20 MHz 119
7.4.4 Example #3: No External Crystal Connection, 5.4 MHz Bus Frequency 121
7.4.5 Example #4: Internal Clock Generator Trim 122
7.5 ICG Registers and Control Bits 123
7.5.1 ICG Control Register 1 (ICGC1) 124
7.5.2 ICG Control Register 2 (ICGC2) 125
7.5.3 ICG Status Register 1 (ICGS1) 126
7.5.4 ICG Status Register 2 (ICGS2) 127
7.5.5 ICG Filter Registers (ICGFLTU, ICGFLTL) 127
7.5.6 ICG Trim Register (ICGTRM) 128

Chapter 8
Central Processor Unit (S08CPUV2)

8.1 Introduction 129
8.1.1 Features 129
8.2 Programmer's Model and CPU Registers 130
8.2.1 Accumulator (A) 130
8.2.2 Index Register (H:X) 130
8.2.3 Stack Pointer (SP) 131
8.2.4 Program Counter (PC) 131
8.2.5 Condition Code Register (CCR) 131

8.3 Addressing Modes 133
8.3.1 Inherent Addressing Mode (INH) 133
8.3.2 Relative Addressing Mode (REL) 133
8.3.3 Immediate Addressing Mode (IMM) 133
8.3.4 Direct Addressing Mode (DIR) 133
8.3.5 Extended Addressing Mode (EXT) 134
8.3.6 Indexed Addressing Mode 134
8.3.6.1 Indexed, No Offset (IX) 134
8.3.6.2 Indexed, No Offset with Post Increment (IX+) 134
8.3.6.3 Indexed, 8-Bit Offset (IX1) 134
8.3.6.4 Indexed, 8-Bit Offset with Post Increment (IX1+) 134
8.3.6.5 Indexed, 16-Bit Offset (IX2) 134
8.3.6.6 SP-Relative, 8-Bit Offset (SP1) 134
8.3.6.7 SP-Relative, 16-Bit Offset (SP2) 135
8.4 Special Operations 135
8.4.1 Reset Sequence 135
8.4.2 Interrupt Sequence 135
8.4.3 Wait Mode Operation 136
8.4.4 Stop Mode Operation 136
8.4.5 BGND Instruction 137
8.5 HCS08 Instruction Set Summary 138

Chapter 9
Keyboard Interrupt (S08KBIV1)

9.1 Introduction 149
9.1.1 Port A and Keyboard Interrupt Pins 149
9.2 Features 149
9.2.1 KBI Block Diagram 151
9.3 Register Definition 151
9.3.1 KBI Status and Control Register (KBI1SC) 152
9.3.2 KBI Pin Enable Register (KBI1PE) 153
9.4 Functional Description 153
9.4.1 Pin Enables 153
9.4.2 Edge and Level Sensitivity 153
9.4.3 KBI Interrupt Controls 154

Chapter 10
Timer/PWM (S08TPMV1)

10.1 Introduction 155
10.2 Features 155
10.3 TPM Block Diagram 157
10.4 Pin Descriptions 158
10.4.1 External TPM Clock Sources 158
10.4.2 TPMxCHn — TPMx Channel n I/O Pins 158
10.5 Functional Description 158

10.5.1 Counter 159
10.5.2 Channel Mode Selection 160
10.5.2.1 Input Capture Mode 160
10.5.2.2 Output Compare Mode 160
10.5.2.3 Edge-Aligned PWM Mode 160
10.5.3 Center-Aligned PWM Mode 161
10.6 TPM Interrupts 163
10.6.1 Clearing Timer Interrupt Flags 163
10.6.2 Timer Overflow Interrupt Description 163
10.6.3 Channel Event Interrupt Description 163
10.6.4 PWM End-of-Duty-Cycle Events 164
10.7 TPM Registers and Control Bits 164
10.7.1 Timer x Status and Control Register (TPMxSC) 165
10.7.2 Timer x Counter Registers (TPMxCNTH:TPMxCNTL) 166
10.7.3 Timer x Counter Modulo Registers (TPMxMODH:TPMxMODL) 167
10.7.4 Timer x Channel n Status and Control Register (TPMxCnSC) 168
10.7.5 Timer x Channel Value Registers (TPMxCnVH:TPMxCnVL) 169

Chapter 11
Serial Communications Interface (S08SCIV1)

11.1 Introduction 171
11.1.1 Features 173
11.1.2 Modes of Operation 173
11.1.3 Block Diagram 174
11.2 Register Definition 176
11.2.1 SCI Baud Rate Registers (SCIxBDH, SCIxBHL) 176
11.2.2 SCI Control Register 1 (SCIxC1) 177
11.2.3 SCI Control Register 2 (SCIxC2) 178
11.2.4 SCI Status Register 1 (SCIxS1) 179
11.2.5 SCI Status Register 2 (SCIxS2) 181
11.2.6 SCI Control Register 3 (SCIxC3) 181
11.2.7 SCI Data Register (SCIxD) 182
11.3 Functional Description 183
11.3.1 Baud Rate Generation 183
11.3.2 Transmitter Functional Description 183
11.3.2.1 Send Break and Queued Idle 184
11.3.3 Receiver Functional Description 184
11.3.3.1 Data Sampling Technique 185
11.3.3.2 Receiver Wakeup Operation 185
11.3.4 Interrupts and Status Flags 186
11.3.5 Additional SCI Functions 187
11.3.5.1 8- and 9-Bit Data Modes 187
11.3.5.2 Stop Mode Operation 187
11.3.5.3 Loop Mode 188

11.3.5.4 Single-Wire Operation 188

Chapter 12
Serial Peripheral Interface (S08SPIV3)

12.1 Introduction 189
12.1.1 Features 191
12.1.2 Block Diagrams 191
12.1.2.1 SPI System Block Diagram 191
12.1.2.2 SPI Module Block Diagram 192
12.1.3 SPI Baud Rate Generation 193
12.2 External Signal Description 194
12.2.1 SPSCK — SPI Serial Clock 194
12.2.2 MOSI — Master Data Out, Slave Data In 194
12.2.3 MISO — Master Data In, Slave Data Out 194
12.2.4 $\overline{SS}$ — Slave Select 194
12.3 Modes of Operation 195
12.3.1 SPI in Stop Modes 195
12.4 Register Definition 195
12.4.1 SPI Control Register 1 (SPI1C1) 195
12.4.2 SPI Control Register 2 (SPI1C2) 196
12.4.3 SPI Baud Rate Register (SPI1BR) 197
12.4.4 SPI Status Register (SPI1S) 198
12.4.5 SPI Data Register (SPI1D) 199
12.5 Functional Description 200
12.5.1 SPI Clock Formats 200
12.5.2 SPI Interrupts 203
12.5.3 Mode Fault Detection 203

Chapter 13
Inter-Integrated Circuit (S08IICV1)

13.1 Introduction 205
13.1.1 Features 207
13.1.2 Modes of Operation 207
13.1.3 Block Diagram 208
13.2 External Signal Description 208
13.2.1 SCL — Serial Clock Line 208
13.2.2 SDA — Serial Data Line 208
13.3 Register Definition 208
13.3.1 IIC Address Register (IIC1A) 209
13.3.2 IIC Frequency Divider Register (IIC1F) 209
13.3.3 IIC Control Register (IIC1C) 212

13.3.4 IIC Status Register (IIC1S) 213
13.3.5 IIC Data I/O Register (IIC1D) 214
13.4 Functional Description 215
13.4.1 IIC Protocol 215
13.4.1.1 START Signal 216
13.4.1.2 Slave Address Transmission 216
13.4.1.3 Data Transfer 216
13.4.1.4 STOP Signal 217
13.4.1.5 Repeated START Signal 217
13.4.1.6 Arbitration Procedure 217
13.4.1.7 Clock Synchronization 217
13.4.1.8 Handshaking 218
13.4.1.9 Clock Stretching 218
13.5 Resets 218
13.6 Interrupts 218
13.6.1 Byte Transfer Interrupt 219
13.6.2 Address Detect Interrupt 219
13.6.3 Arbitration Lost Interrupt 219
13.7 Initialization/Application Information 220

Chapter 14
Analog-to-Digital Converter (S08ATDV3)

14.1 Introduction 225
14.1.1 Features 225
14.1.2 Modes of Operation 225
14.1.2.1 Stop Mode 225
14.1.2.2 Power Down Mode 225
14.1.3 Block Diagram 225
14.2 Signal Description 226
14.2.1 Overview 226
14.2.1.1 Channel Input Pins — AD1P7–AD1P0 227
14.2.1.2 ATD Reference Pins — V_{REFH}, V_{REFL} 227
14.2.1.3 ATD Supply Pins — V_{DDAD}, V_{SSAD} 227
14.3 Functional Description 227
14.3.1 Mode Control 227
14.3.2 Sample and Hold 228
14.3.3 Analog Input Multiplexer 230
14.3.4 ATD Module Accuracy Definitions 230
14.4 Resets 233
14.5 Interrupts 233
14.6 ATD Registers and Control Bits 233
14.6.1 ATD Control (ATDC) 234
14.6.2 ATD Status and Control (ATD1SC) 236
14.6.3 ATD Result Data (ATD1RH, ATD1RL) 237

14.6.4 ATD Pin Enable (ATD1PE) 238

Chapter 15
Development Support

15.1 Introduction 239
15.1.1 Features 240
15.2 Background Debug Controller (BDC) 240
15.2.1 BKGD Pin Description 241
15.2.2 Communication Details 242
15.2.3 BDC Commands 246
15.2.4 BDC Hardware Breakpoint 248
15.3 On-Chip Debug System (DBG) 249
15.3.1 Comparators A and B 249
15.3.2 Bus Capture Information and FIFO Operation 249
15.3.3 Change-of-Flow Information 250
15.3.4 Tag vs. Force Breakpoints and Triggers 250
15.3.5 Trigger Modes 251
15.3.6 Hardware Breakpoints 253
15.4 Register Definition 253
15.4.1 BDC Registers and Control Bits 253
15.4.1.1 BDC Status and Control Register (BDCSCR) 254
15.4.1.2 BDC Breakpoint Match Register (BDCBKPT) 255
15.4.2 System Background Debug Force Reset Register (SBDFR) 255
15.4.3 DBG Registers and Control Bits 256
15.4.3.1 Debug Comparator A High Register (DBGCAH) 256
15.4.3.2 Debug Comparator A Low Register (DBGCAL) 256
15.4.3.3 Debug Comparator B High Register (DBGCBH) 256
15.4.3.4 Debug Comparator B Low Register (DBGCBL) 256
15.4.3.5 Debug FIFO High Register (DBGFH) 257
15.4.3.6 Debug FIFO Low Register (DBGFL) 257
15.4.3.7 Debug Control Register (DBGC) 258
15.4.3.8 Debug Trigger Register (DBGT) 259
15.4.3.9 Debug Status Register (DBGS) 260

Appendix A
Electrical Characteristics

A.1 Introduction 261
A.2 Absolute Maximum Ratings 261
A.3 Thermal Characteristics 262
A.4 Electrostatic Discharge (ESD) Protection Characteristics 263
A.5 DC Characteristics 263

A.6 Supply Current Characteristics 267
A.7 ATD Characteristics 271
A.8 Internal Clock Generation Module Characteristics 273
A.8.1 ICG Frequency Specifications 274
A.9 AC Characteristics 275
A.9.1 Control Timing 276
A.9.2 Timer/PWM (TPM) Module Timing 277
A.9.3 SPI Timing 278
A.10 Flash Specifications 281

Appendix B
EB652: Migrating from the GB60 Series to the GB60A Series

B.1 Overview 283
B.2 Flash Programming Voltage 283
B.3 Flash Block Protection: 60K Devices Only 283
B.4 Internal Clock Generator: High Gain Oscillator Option 283
B.5 Internal Clock Generator: Low-Power Oscillator Maximum Frequency 284
B.6 Internal Clock Generator: Loss-of-Clock Disable Option 284
B.7 System Device Identification Register 285

Appendix C
Ordering Information and Mechanical Drawings

C.1 Ordering Information 287
C.2 Mechanical Drawings 288

Chapter 1
Device Overview

1.1 Overview

The MC9S08GBxxA/GTxxA are members of the low-cost, high-performance HCS08 Family of 8-bit microcontroller units (MCUs). All MCUs in the family use the enhanced HCS08 core and are available with a variety of modules, memory sizes, memory types, and package types.

1.2 Features

Features have been organized to reflect:

- Standard features of the HCS08 Family
- Features of the MC9S08GBxxA/GTxxA MCU

1.2.1 Standard Features of the HCS08 Family

- 40-MHz HCS08 CPU (central processor unit)
- HC08 instruction set with added BGND instruction
- Background debugging system (see also Chapter 15, “Development Support”)
- Breakpoint capability to allow single breakpoint setting during in-circuit debugging (plus two more breakpoints in on-chip debug module)
- Debug module containing two comparators and nine trigger modes. Eight deep FIFO for storing change-of-flow addresses and event-only data. Debug module supports both tag and force breakpoints.
- Support for up to 32 interrupt/reset sources
- Power-saving modes: wait plus three stops
- System protection features:
  - Optional computer operating properly (COP) reset
  - Low-voltage detection with reset or interrupt
  - Illegal opcode detection with reset
  - Illegal address detection with reset (some devices don’t have illegal addresses)

1.2.2 Features of MC9S08GBxxA/GTxxA Series of MCUs

- On-chip in-circuit programmable flash memory:
  - Fully read/write functional across voltage and temperature ranges
  - Block protection and security options
  - (see Table 1-1 for device-specific information)
- On-chip random-access memory (RAM) (see Table 1-1 for device specific information)
- 8-channel, 10-bit analog-to-digital converter (ATD)
- Two serial communications interface modules (SCI)
- Serial peripheral interface module (SPI)
- Multiple clock source options:
  - Internally generated clock with ±0.2% trimming resolution and ±0.5% deviation across voltage
  - Crystal
  - Resonator
  - External clock
- Inter-integrated circuit bus module to operate up to 100 kbps (IIC)
- One 3-channel and one 5-channel 16-bit timer/pulse width modulator (TPM) modules with selectable input capture, output compare, and edge-aligned PWM capability on each channel. Each timer module may be configured for buffered, centered PWM (CPWM) on all channels (TPMx).
- 8-pin keyboard interrupt module (KBI)
- 16 high-current pins (limited by package dissipation)
- Software selectable pullups on ports when used as input. Selection is on an individual port bit basis. During output mode, pullups are disengaged.
- Internal pullup on $\overline{\text{RESET}}$ and IRQ pin to reduce customer system cost
- Up to 56 general-purpose input/output (I/O) pins, depending on package selection
- 64-pin low-profile quad flat package (LQFP) — MC9S08GBxxA
- 48-pin quad flat package, no lead (QFN) — MC9S08GTxxA
- 44-pin quad flat package (QFP) — MC9S08GTxxA
- 42-pin skinny dual in-line package (SDIP) — MC9S08GTxxA

1.2.3 Devices in the MC9S08GBxxA/GTxxA Series

Table 1-1 lists the devices available in the MC9S08GBxxA/GTxxA series and summarizes the differences among them.

Table 1-1. Devices in the MC9S08GBxxA/GTxxA Series

Device	Flash	RAM	TPM	I/O	Packages
MC9S08GB60A	60K	4K	One 3-channel and one 5-channel, 16-bit timer	56	64 LQFP
MC9S08GB32A	32K	2K	One 3-channel and one 5-channel, 16-bit timer	56	64 LQFP
MC9S08GT60A	60K	4K	Two 2-channel, 16-bit timers	39 36 33	48 QFN[1] 44 QFP 42 SDIP
MC9S08GT32A	32K	2K	Two 2-channel, 16-bit timers	39 36 33	48 QFN[(1)] 44 QFP 42 SDIP

[1] The 48-pin QFN package has one 3-channel and one 2-channel 16-bit TPM.

1.3 MCU Block Diagrams

These block diagrams show the structure of the MC9S08GBxxA/GTxxA MCUs.

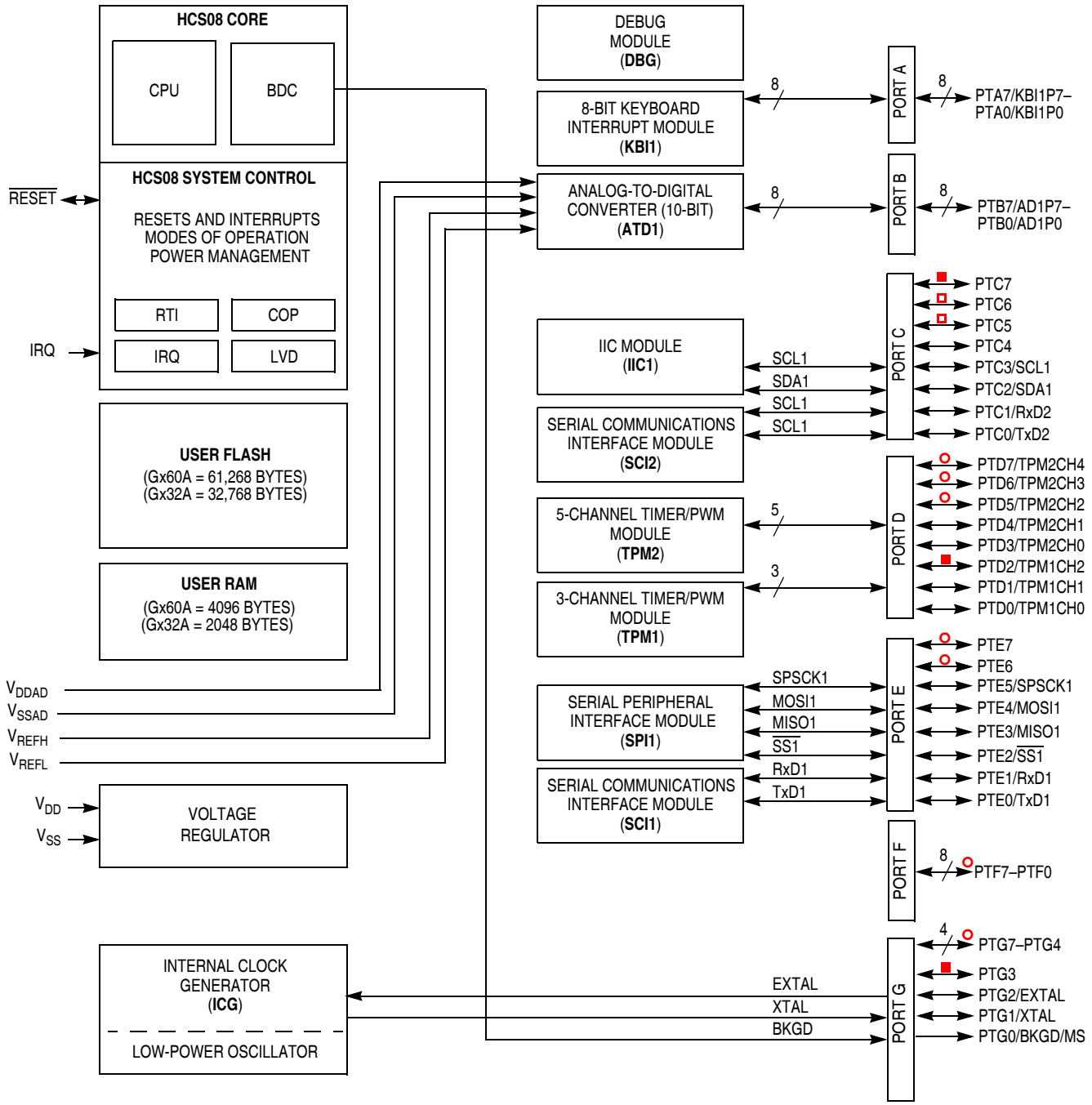

Note: Not all pins are bonded out in all packages. See Table 2-2 for complete details.

Block Diagram Symbol Key:
○ = Not connected in 48-, 44-, and 42-pin packages
■ = Not connected in 44- and 42-pin packages
□ = Not connected in 42-pin packages

Figure 1-1. MC9S08GBxxA/GTxxA Block Diagram

Table 1-2 lists the functional versions of the on-chip modules.

Table 1-2. Block Versions

Module	Version
Analog-to-Digital Converter (ATD)	3
Internal Clock Generator (ICG)	2
Inter-Integrated Circuit (IIC)	1
Keyboard Interrupt (KBI)	1
Serial Communications Interface (SCI)	1
Serial Peripheral Interface (SPI)	3
Timer Pulse-Width Modulator (TPM)	1
Central Processing Unit (CPU)	2

1.4 System Clock Distribution

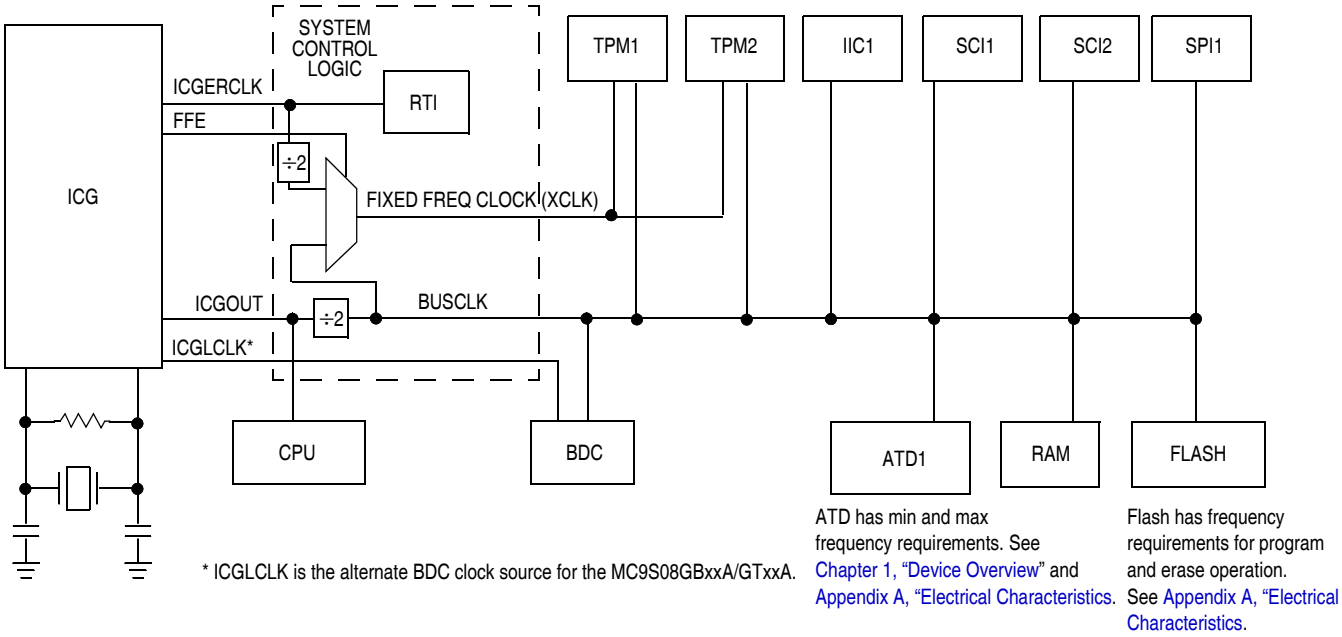

Figure 1-2. System Clock Distribution Diagram

Some of the modules inside the MCU have clock source choices. Figure 1-2 shows a simplified clock connection diagram. The ICG supplies the clock sources:

- ICGOUT is an output of the ICG module. It is one of the following:
  - The external crystal oscillator
  - An external clock source
  - The output of the digitally-controlled oscillator (DCO) in the frequency-locked loop sub-module

  Control bits inside the ICG determine which source is connected.

- FFE is a control signal generated inside the ICG. If the frequency of ICGOUT > 4 × the frequency of ICGERCLK, this signal is a logic 1 and the fixed-frequency clock will be the ICGERCLK. Otherwise the fixed-frequency clock will be BUSCLK.
- ICGLCLK — Development tools can select this internal self-clocked source (~ 8 MHz) to speed up BDC communications in systems where the bus clock is slow.
- ICGERCLK — External reference clock can be selected as the real-time interrupt clock source.

Chapter 2
Pins and Connections

2.1 Introduction

This section describes signals that connect to package pins. It includes a pinout diagram, a table of signal properties, and detailed discussion of signals.

2.2 Device Pin Assignment

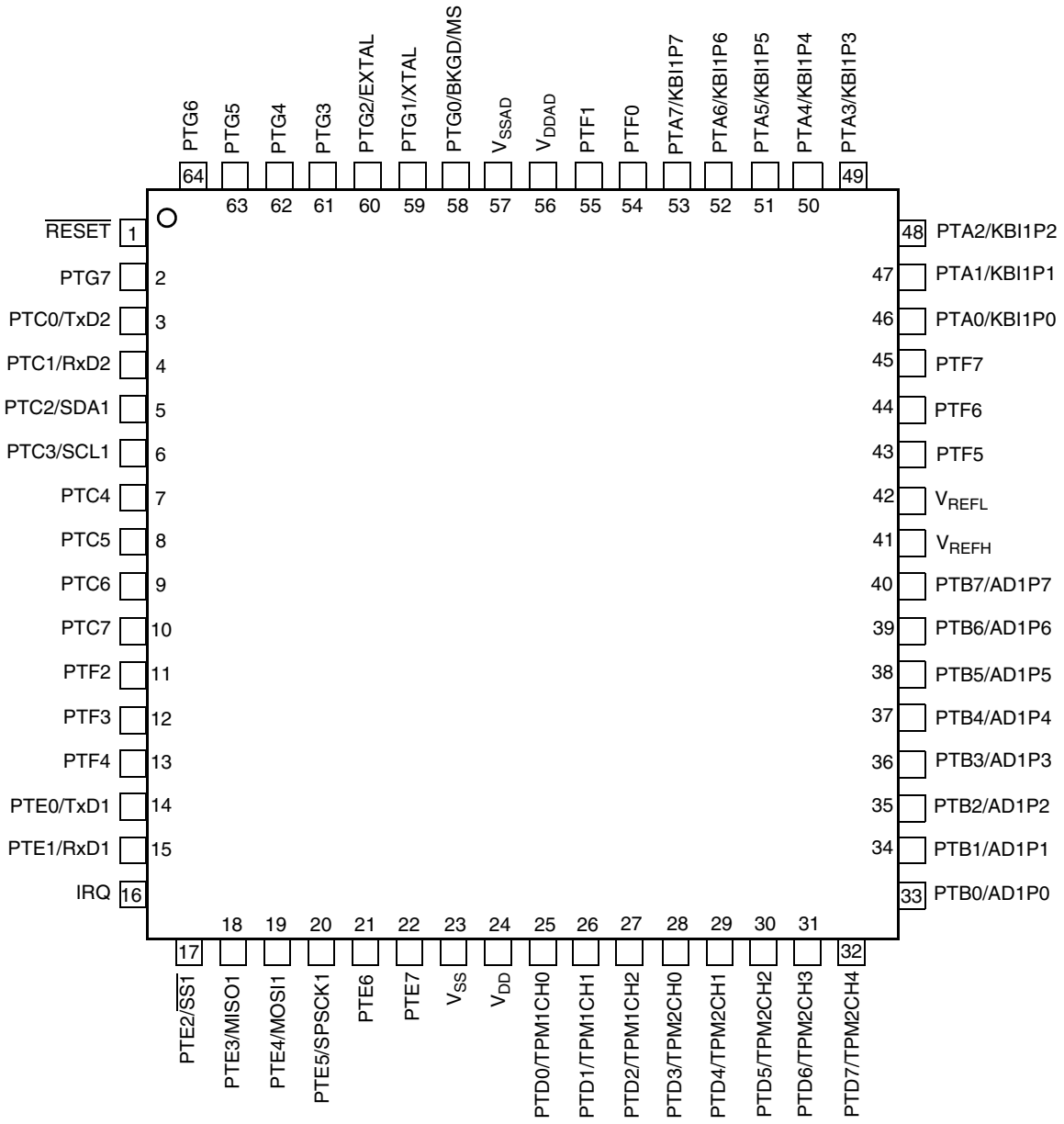

Figure 2-1. MC9S08GBxxA in 64-Pin LQFP Package

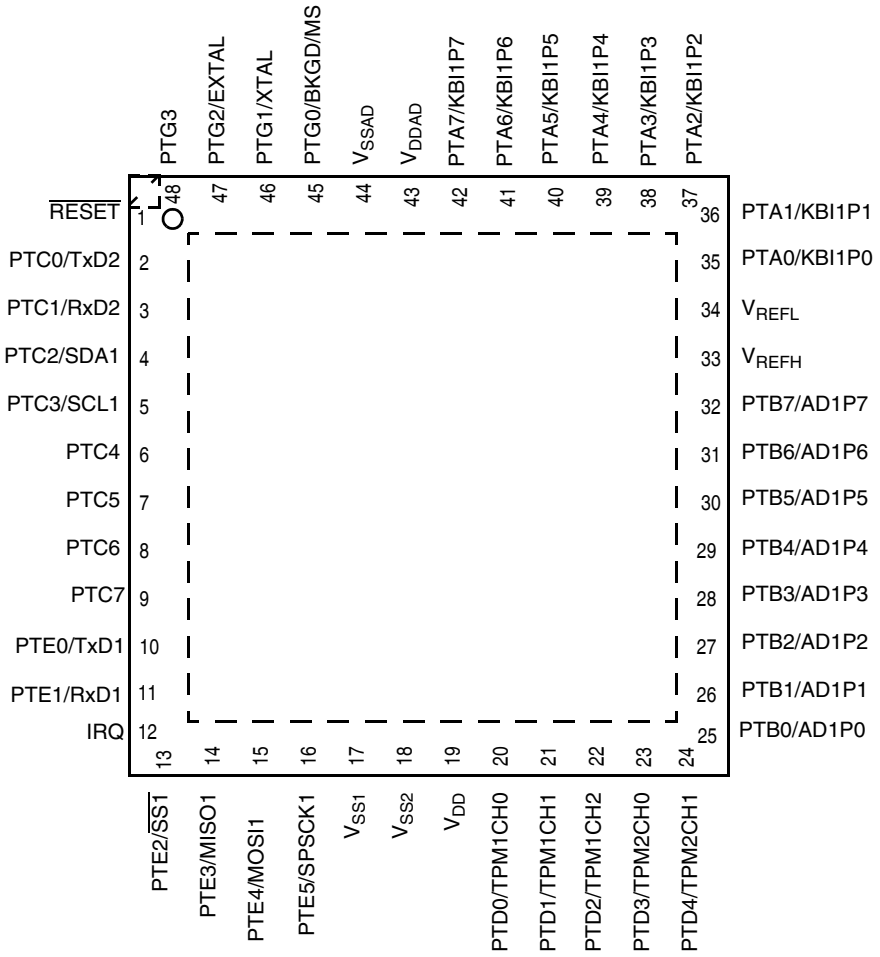

Figure 2-2. MC9S08GTxxA in 48-Pin QFN Package

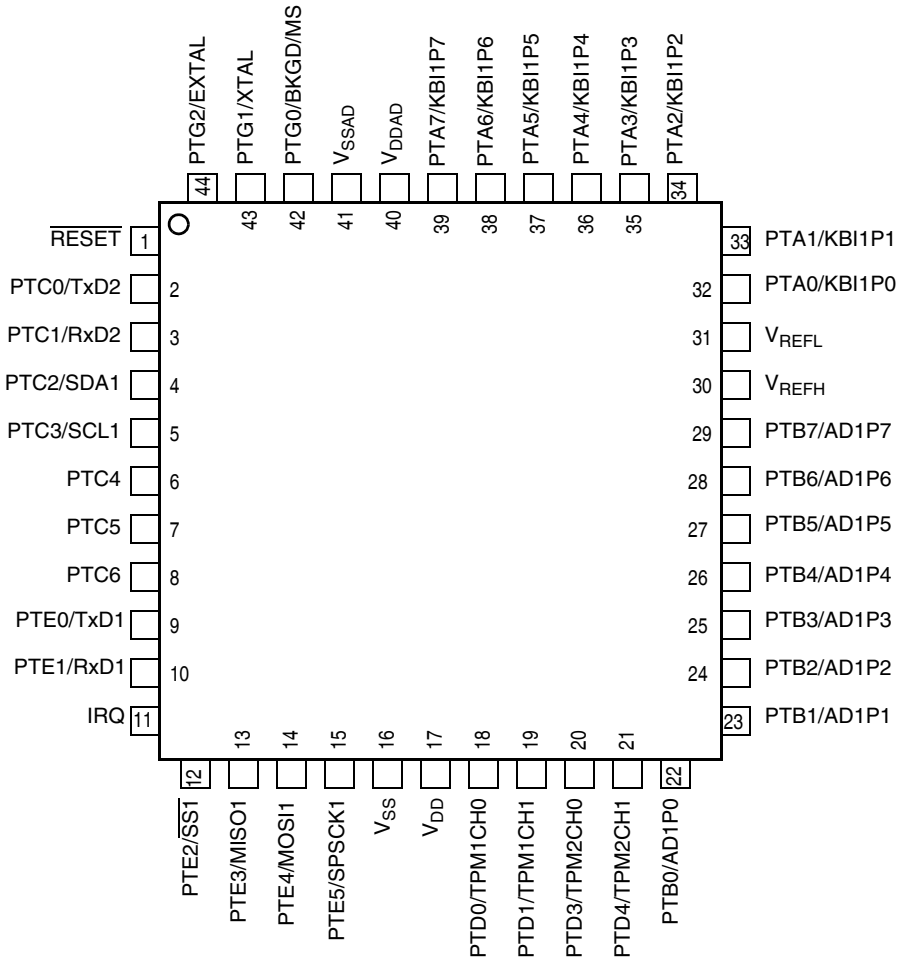

Figure 2-3. MC9S08GTxxA in 44-Pin QFP Package

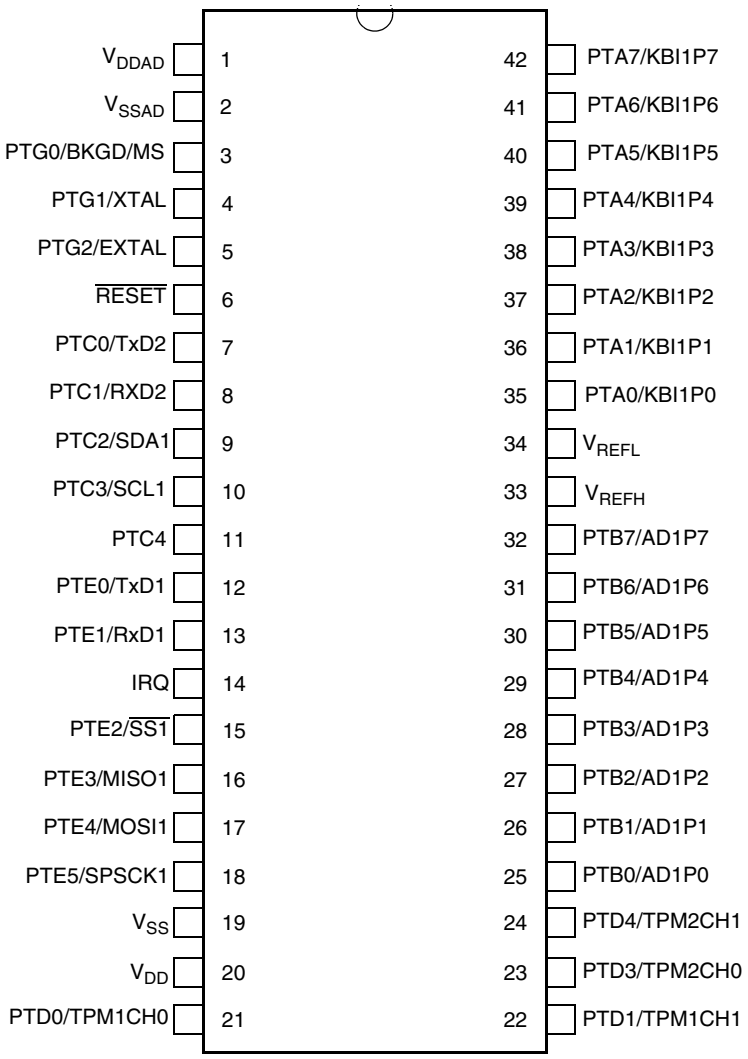

Figure 2-4. . MC9S08GTxxA in 42-Pin SDIP Package

2.3 Recommended System Connections

Figure 2-4 shows pin connections that are common to almost all MC9S08GBxxA application systems. MC9S08GTxxA connections will be similar except for the number of I/O pins available. A more detailed discussion of system connections follows.

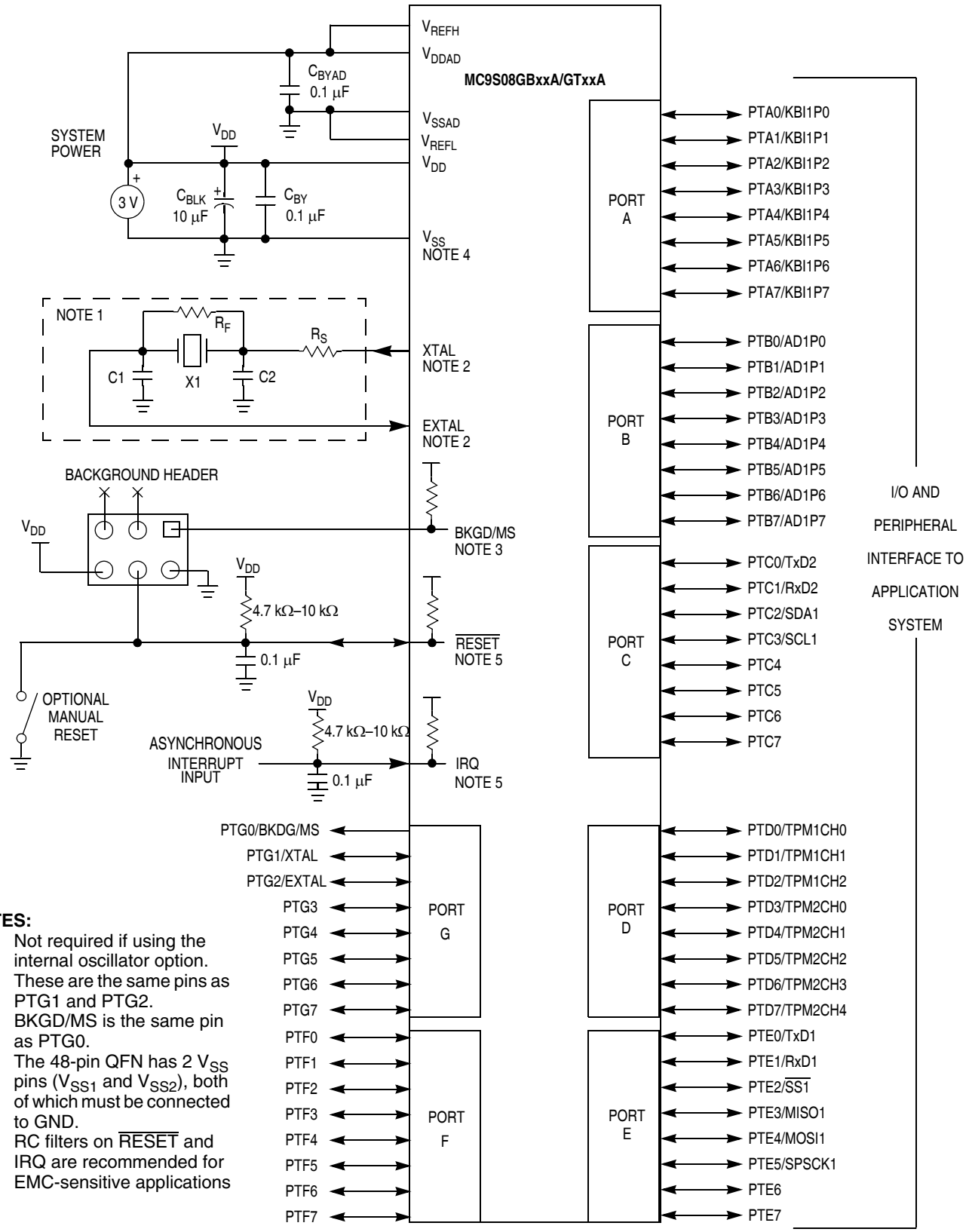

NOTES:

1. Not required if using the internal oscillator option.
2. These are the same pins as PTG1 and PTG2.
3. BKGD/MS is the same pin as PTG0.
4. The 48-pin QFN has 2 V_{SS} pins (V_{SS1} and V_{SS2}), both of which must be connected to GND.
5. RC filters on $\overline{\text{RESET}}$ and IRQ are recommended for EMC-sensitive applications

Figure 2-5. Basic System Connections

2.3.1 Power

V_{DD} and V_{SS} are the primary power supply pins for the MCU. This voltage source supplies power to all I/O buffer circuitry and to an internal voltage regulator. The internal voltage regulator provides regulated lower-voltage source to the CPU and other internal circuitry of the MCU.

Typically, application systems have two separate capacitors across the power pins. In this case, there should be a bulk electrolytic capacitor, such as a 10-µF tantalum capacitor, to provide bulk charge storage for the overall system and a 0.1-µF ceramic bypass capacitor located as close to the MCU power pins as practical to suppress high-frequency noise.

V_{DDAD} and V_{SSAD} are the analog power supply pins for the MCU. This voltage source supplies power to the ATD. A 0.1-µF ceramic bypass capacitor should be located as close to the MCU power pins as practical to suppress high-frequency noise.

2.3.2 Oscillator

Out of reset, the MCU uses an internally generated clock (self-clocked mode — f_{Self_reset}), that is approximately equivalent to an 8-MHz crystal rate. This frequency source is used during reset startup and can be enabled as the clock source for stop recovery to avoid the need for a long crystal startup delay. This MCU also contains a trimmable internal clock generator (ICG) module that can be used to run the MCU. For more information on the ICG, see Chapter 7, "Internal Clock Generator (S08ICGV2)."

The oscillator in this MCU is a Pierce oscillator that can accommodate a crystal or ceramic resonator in either of two frequency ranges selected by the RANGE bit in the ICGC1 register. Rather than a crystal or ceramic resonator, an external oscillator can be connected to the EXTAL input pin, and the XTAL output pin can be used as general I/O.

Refer to Figure 2-4 for the following discussion. R_S (when used) and R_F should be low-inductance resistors such as carbon composition resistors. Wire-wound resistors, and some metal film resistors, have too much inductance. C1 and C2 normally should be high-quality ceramic capacitors that are specifically designed for high-frequency applications.

R_F is used to provide a bias path to keep the EXTAL input in its linear range during crystal startup and its value is not generally critical. Typical systems use 1 MΩ to 10 MΩ. Higher values are sensitive to humidity and lower values reduce gain and (in extreme cases) could prevent startup.

C1 and C2 are typically in the 5-pF to 25-pF range and are chosen to match the requirements of a specific crystal or resonator. Be sure to take into account printed circuit board (PCB) capacitance and MCU pin capacitance when sizing C1 and C2. The crystal manufacturer typically specifies a load capacitance which is the series combination of C1 and C2 which are usually the same size. As a first-order approximation, use 10 pF as an estimate of combined pin and PCB capacitance for each oscillator pin (EXTAL and XTAL).

2.3.3 Reset

$\overline{\text{RESET}}$ is a dedicated pin with a pullup device built in. It has input hysteresis, a high current output driver, and no output slew rate control. Internal power-on reset and low-voltage reset circuitry typically make external reset circuitry unnecessary. This pin is normally connected to the standard 6-pin background

debug connector so a development system can directly reset the MCU system. If desired, a manual external reset can be added by supplying a simple switch to ground (pull reset pin low to force a reset).

Whenever any reset is initiated (whether from an external signal or from an internal system), the reset pin is driven low for approximately 34 cycles of f_{Self_reset}, released, and sampled again approximately 38 cycles of f_{Self_reset} later. If reset was caused by an internal source such as low-voltage reset or watchdog timeout, the circuitry expects the reset pin sample to return a logic 1. The reset circuitry decodes the cause of reset and records it by setting a corresponding bit in the system control reset status register (SRS).

In EMC-sensitive applications, an external RC filter is recommended on the reset pin. See Figure 2-4 for an example.

2.3.4 Background / Mode Select (PTG0/BKGD/MS)

The background/mode select (BKGD/MS) shares its function with an I/O port pin. While in reset, the pin functions as a mode select pin. Immediately after reset rises the pin functions as the background pin and can be used for background debug communication. While functioning as a background/mode select pin, the pin includes an internal pullup device, input hysteresis, a standard output driver, and no output slew rate control. When used as an I/O port (PTG0) the pin is limited to output only.

If nothing is connected to this pin, the MCU will enter normal operating mode at the rising edge of reset. If a debug system is connected to the 6-pin standard background debug header, it can hold BKGD/MS low during the rising edge of reset which forces the MCU to active background mode.

The BKGD pin is used primarily for background debug controller (BDC) communications using a custom protocol that uses 16 clock cycles of the target MCU's BDC clock per bit time. The target MCU's BDC clock could be as fast as the bus clock rate, so there should never be any significant capacitance connected to the BKGD/MS pin that could interfere with background serial communications.

Although the BKGD pin is a pseudo open-drain pin, the background debug communication protocol provides brief, actively driven, high speedup pulses to ensure fast rise times. Small capacitances from cables and the absolute value of the internal pullup device play almost no role in determining rise and fall times on the BKGD pin.

2.3.5 General-Purpose I/O and Peripheral Ports

The remaining 55 pins are shared among general-purpose I/O and on-chip peripheral functions such as timers and serial I/O systems. (17 of these pins are not bonded out on the 48-pin package, 20 of these pins are not bonded out on the 44-pin package and 22 of hese pins are not bonded out on the 42-pin package.) Immediately after reset, all 55 of these pins are configured as high-impedance general-purpose inputs with internal pullup devices disabled.

NOTE

To prevent extra current drain from floating input pins, the reset initialization routine in the application program should either enable on-chip pullup devices or change the direction of unused pins to outputs so the pins do not float.

For information about controlling these pins as general-purpose I/O pins, see Chapter 6, "Parallel Input/Output." For information about how and when on-chip peripheral systems use these pins, refer to the appropriate section from Table 2-1.

Table 2-1. Pin Sharing References

Port Pins	Alternate Function	Reference[1]
PTA7–PTA0	KBI1P7–KBI1P0	Chapter 2, "Pins and Connections"
PTB7–PTB0	AD1P7–AD1P0	Chapter 14, "Analog-to-Digital Converter (S08ATDV3)"
PTC7–PTC4	—	Chapter 6, "Parallel Input/Output"
PTC3–PTC2	SCL1–SDA1	Chapter 13, "Inter-Integrated Circuit (S08IICV1)"
PTC1–PTC0	RxD2–TxD2	Chapter 11, "Serial Communications Interface (S08SCIV1)"
PTD7–PTD3	TPM2CH4–TPM2CH0	Chapter 10, "Timer/PWM (S08TPMV1)"
PTD2–PTD0	TPM1CH2–TPM1CH0	Chapter 10, "Timer/PWM (S08TPMV1)"
PTE7–PTE6	—	Chapter 6, "Parallel Input/Output"
PTE5 PTE4 PTE3 PTE2	SPSCK1 MISO1 MOSI1 $\overline{SS1}$	Chapter 12, "Serial Peripheral Interface (S08SPIV3)"
PTE1–PTE0	RxD1–TxD1	Chapter 11, "Serial Communications Interface (S08SCIV1)"
PTF7–PTF0	—	Chapter 6, "Parallel Input/Output"
PTG7–PTG3	—	Chapter 6, "Parallel Input/Output"
PTG2–PTG1	EXTAL–XTAL	Chapter 7, "Internal Clock Generator (S08ICGV2)"
PTG0	BKGD/MS	Chapter 15, "Development Support"

[1] See this section for information about modules that share these pins.

When an on-chip peripheral system is controlling a pin, data direction control bits still determine what is read from port data registers even though the peripheral module controls the pin direction by controlling the enable for the pin's output buffer. See Chapter 6, "Parallel Input/Output" for details.

Pullup enable bits for each input pin control whether on-chip pullup devices are enabled whenever the pin is acting as an input even if it is being controlled by an on-chip peripheral module. When the PTA7–PTA4 pins are controlled by the KBI module and are configured for rising-edge/high-level sensitivity, the pullup enable control bits enable pulldown devices rather than pullup devices. Similarly, when IRQ is configured as the IRQ input and is set to detect rising edges, the pullup enable control bit enables a pulldown device rather than a pullup device.

2.3.6 Signal Properties Summary

Table 2-2 summarizes I/O pin characteristics. These characteristics are determined by the way the common pin interfaces are hardwired to internal circuits.

Table 2-2. Signal Properties

Pin Name	Dir	High Current Pin	Output Slew [1]	Pull-Up[2]	Comments
V_{DD}		—	—	—	
V_{SS}		—	—	—	The 48-pin QFN package has two V_{SS} pins — V_{SS1} and V_{SS2}.
V_{DDAD}		—	—	—	
V_{SSAD}		—	—	—	
V_{REFH}		—	—	—	
V_{REFL}		—	—	—	
$\overline{RESET}$	I/O	Y	N	Y	Pin contains integrated pullup.
IRQ	I	—	—	Y	IRQPE must be set to enable IRQ function. IRQ does not have a clamp diode to V_{DD}. IRQ should not be driven above V_{DD}. Pullup/pulldown active when IRQ pin function enabled. Pullup forced on when IRQ enabled for falling edges; pulldown forced on when IRQ enabled for rising edges.
PTA0/KBI1P0	I/O	N	SWC	SWC	
PTA1/KBI1P1	I/O	N	SWC	SWC	
PTA2/KBI1P2	I/O	N	SWC	SWC	
PTA3/KBI1P3	I/O	N	SWC	SWC	
PTA4/KBI1P4	I/O	N	SWC	SWC	Pullup/pulldown active when KBI pin function enabled. Pullup forced on when KBI1Px enabled for falling edges; pulldown forced on when KBI1Px enabled for rising edges.
PTA5/KBI1P5	I/O	N	SWC	SWC	
PTA6/KBI1P6	I/O	N	SWC	SWC	
PTA7/KBI1P7	I/O	N	SWC	SWC	
PTB0/AD1P0	I/O	N	SWC	SWC	
PTB1/AD1P1	I/O	N	SWC	SWC	
PTB2/AD1P2	I/O	N	SWC	SWC	
PTB3/AD1P3	I/O	N	SWC	SWC	
PTB4/AD1P4	I/O	N	SWC	SWC	
PTB5/AD1P5	I/O	N	SWC	SWC	
PTB6/AD1P6	I/O	N	SWC	SWC	
PTB7/AD1P7	I/O	N	SWC	SWC	
PTC0/TxD2	I/O	Y	SWC	SWC	When pin is configured for SCI function, pin is configured for partial output drive.
PTC1/RxD2	I/O	Y	SWC	SWC	
PTC2/SDA1	I/O	Y	SWC	SWC	
PTC3/SCL1	I/O	Y	SWC	SWC	
PTC4	I/O	Y	SWC	SWC	
PTC5	I/O	Y	SWC	SWC	Not available on 42-pin package
PTC6	I/O	Y	SWC	SWC	Not available on 42-pin package

Table 2-2. Signal Properties (continued)

Pin Name	Dir	High Current Pin	Output Slew [1]	Pull-Up[2]	Comments
PTC7	I/O	Y	SWC	SWC	Not available on 42-pin package
PTD0/TPM1CH0	I/O	N	SWC	SWC	
PTD1/TPM1CH1	I/O	N	SWC	SWC	
PTD2/TPM1CH2	I/O	N	SWC	SWC	Not available on 42-pin , or 44-pin package
PTD3/TPM2CH0	I/O	N	SWC	SWC	
PTD4/TPM2CH1	I/O	N	SWC	SWC	
PTD5/TPM2CH2	I/O	N	SWC	SWC	Not available on 42-, 44-, or 48-pin package
PTD6/TPM2CH3	I/O	N	SWC	SWC	Not available on 42-, 44-, or 48-pin package
PTD7/TPM2CH4	I/O	N	SWC	SWC	Not available on 42-, 44-, or 48-pin package
PTE0/TxD1	I/O	N	SWC	SWC	
PTE1/RxD1	I/O	N	SWC	SWC	
PTE2/$\overline{SS1}$	I/O	N	SWC	SWC	
PTE3/MISO1	I/O	N	SWC	SWC	
PTE4/MOSI1	I/O	N	SWC	SWC	
PTE5/SPSCK1	I/O	N	SWC	SWC	
PTE6	I/O	N	SWC	SWC	Not available on 42-, 44-, or 48-pin package
PTE7	I/O	N	SWC	SWC	Not available on 42-, 44-, or 48-pin package
PTF0	I/O	Y	SWC	SWC	Not available on 42-, 44-, or 48-pin package
PTF1	I/O	Y	SWC	SWC	Not available on 42-, 44-, or 48-pin package
PTF2	I/O	Y	SWC	SWC	Not available on 42-, 44-, or 48-pin package
PTF3	I/O	Y	SWC	SWC	Not available on 42-, 44-, or 48-pin package
PTF4	I/O	Y	SWC	SWC	Not available on 42-, 44-, or 48-pin package
PTF5	I/O	Y	SWC	SWC	Not available on 42-, 44-, or 48-pin package
PTF6	I/O	Y	SWC	SWC	Not available on 42-, 44-, or 48-pin package
PTF7	I/O	Y	SWC	SWC	Not available on 42-, 44-, or 48-pin package
PTG0/BKGD/MS	O	N	SWC	SWC	Pullup enabled and slew rate disabled when BDM function enabled.
PTG1/XTAL	I/O	N	SWC	SWC	Pullup and slew rate disabled when XTAL pin function.
PTG2/EXTAL	I/O	N	SWC	SWC	Pullup and slew rate disabled when EXTAL pin function.
PTG3	I/O	N	SWC	SWC	Not available on 42- or 44-pin package
PTG4	I/O	N	SWC	SWC	Not available on 42-, 44-, or 48-pin package
PTG5	I/O	N	SWC	SWC	Not available on 42-, 44-, or 48-pin package
PTG6	I/O	N	SWC	SWC	Not available on 42-, 44-, or 48-pin package
PTG7	I/O	N	SWC	SWC	Not available on 42-, 44-, or 48-pin package

[1] SWC is software controlled slew rate, the register is associated with the respective port.

[2] SWC is software controlled pullup resistor, the register is associated with the respective port.

Chapter 3
Modes of Operation

3.1 Introduction

The operating modes of the MC9S08GBxxA/GTxxA are described in this section. Entry into each mode, exit from each mode, and functionality while in each of the modes are described.

3.2 Features

- Active background mode for code development
- Wait mode:
  - — CPU shuts down to conserve power
  - — System clocks running
  - — Full voltage regulation maintained
- Stop modes:
  - — System clocks stopped; voltage regulator in standby
  - — Stop1 — Full power down of internal circuits for maximum power savings
  - — Stop2 — Partial power down of internal circuits, RAM contents retained
  - — Stop3 — All internal circuits powered for fast recovery

3.3 Run Mode

This is the normal operating mode for the MC9S08GBxxA/GTxxA. This mode is selected when the BKGD/MS pin is high at the rising edge of reset. In this mode, the CPU executes code from internal memory with execution beginning at the address fetched from memory at 0xFFFE:0xFFFF after reset.

3.4 Active Background Mode

The active background mode functions are managed through the background debug controller (BDC) in the HCS08 core. The BDC, together with the on-chip debug module (DBG), provide the means for analyzing MCU operation during software development.

Active background mode is entered in any of five ways:

- When the BKGD/MS pin is low at the rising edge of reset
- When a BACKGROUND command is received through the BKGD pin
- When a BGND instruction is executed
- When encountering a BDC breakpoint

- When encountering a DBG breakpoint

After entering active background mode, the CPU is held in a suspended state waiting for serial background commands rather than executing instructions from the user's application program.

Background commands are of two types:

- Non-intrusive commands, defined as commands that can be issued while the user program is running. Non-intrusive commands can be issued through the BKGD pin while the MCU is in run mode; non-intrusive commands can also be executed while the MCU is in the active background mode. Non-intrusive commands include:
  - Memory access commands
  - Memory-access-with-status commands
  - BDC register access commands
  - The BACKGROUND command
- Active background commands, which can be executed only while the MCU is in active background mode. Active background commands include commands to:
  - Read or write CPU registers
  - Trace one user program instruction at a time
  - Leave active background mode to return to the user's application program (GO)

The active background mode is used to program a bootloader or user application program into the flash program memory before the MCU is operated in run mode for the first time. When the MC9S08GBxxA/GTxxA is shipped from the Freescale Semiconductor factory, the flash program memory is erased by default unless specifically noted so there is no program that could be executed in run mode until the flash memory is initially programmed. The active background mode can also be used to erase and reprogram the flash memory after it has been previously programmed.

For additional information about the active background mode, refer to Chapter 15, "Development Support.

3.5 Wait Mode

Wait mode is entered by executing a WAIT instruction. Upon execution of the WAIT instruction, the CPU enters a low-power state in which it is not clocked. The I bit in CCR is cleared when the CPU enters the wait mode, enabling interrupts. When an interrupt request occurs, the CPU exits the wait mode and resumes processing, beginning with the stacking operations leading to the interrupt service routine.

While the MCU is in wait mode, there are some restrictions on which background debug commands can be used. Only the BACKGROUND command and memory-access-with-status commands are available when the MCU is in wait mode. The memory-access-with-status commands do not allow memory access, but they report an error indicating that the MCU is in either stop or wait mode. The BACKGROUND command can be used to wake the MCU from wait mode and enter active background mode.

3.6 Stop Modes

One of three stop modes is entered upon execution of a STOP instruction when the STOPE bit in the system option register is set. In all stop modes, all internal clocks are halted. If the STOPE bit is not set

when the CPU executes a STOP instruction, the MCU will not enter any of the stop modes and an illegal opcode reset is forced. The stop modes are selected by setting the appropriate bits in SPMSC2.

Table 3-1 summarizes the behavior of the MCU in each of the stop modes.

Table 3-1. Stop Mode Behavior

Mode	PDC	PPDC	CPU, Digital Peripherals, Flash	RAM	ICG	ATD	Regulator	I/O Pins	RTI
Stop1	1	0	Off	Off	Off	Disabled[1]	Off	Reset	Off
Stop2	1	1	Off	Standby	Off	Disabled	Standby	States held	Optionally on
Stop3	0	Don't care	Standby	Standby	Off[2]	Disabled	Standby	States held	Optionally on

[1] Either ATD stop mode or power-down mode depending on the state of ATDPU.

[2] Crystal oscillator can be configured to run in stop3. Please see the ICG registers.

3.6.1 Stop1 Mode

The stop1 mode provides the lowest possible standby power consumption by causing the internal circuitry of the MCU to be powered down. Stop1 can be entered only if the LVD circuit is not enabled in stop modes (either LVDE or LVDSE not set).

When the MCU is in stop1 mode, all internal circuits that are powered from the voltage regulator are turned off. The voltage regulator is in a low-power standby state, as is the ATD.

Exit from stop1 is performed by asserting either of the wake-up pins on the MCU: $\overline{\text{RESET}}$ or IRQ. IRQ is always an active low input when the MCU is in stop1, regardless of how it was configured before entering stop1.

Entering stop1 mode automatically asserts LVD. Stop1 cannot be exited until $V_{DD} > V_{LVDH/L}$ rising (V_{DD} must rise above the LVI rearm voltage).

Upon wake-up from stop1 mode, the MCU will start up as from a power-on reset (POR). The CPU will take the reset vector.

3.6.2 Stop2 Mode

The stop2 mode provides very low standby power consumption and maintains the contents of RAM and the current state of all of the I/O pins. Stop2 can be entered only if the LVD circuit is not enabled in stop modes (either LVDE or LVDSE not set).

Before entering stop2 mode, the user must save the contents of the I/O port registers, as well as any other memory-mapped registers they want to restore after exit of stop2, to locations in RAM. Upon exit of stop2, these values can be restored by user software before pin latches are opened.

When the MCU is in stop2 mode, all internal circuits that are powered from the voltage regulator are turned off, except for the RAM. The voltage regulator is in a low-power standby state, as is the ATD. Upon entry

into stop2, the states of the I/O pins are latched. The states are held while in stop2 mode and after exiting stop2 mode until a 1 is written to PPDACK in SPMSC2.

Exit from stop2 is performed by asserting either of the wake-up pins: $\overline{\text{RESET}}$ or IRQ, or by an RTI interrupt. IRQ is always an active low input when the MCU is in stop2, regardless of how it was configured before entering stop2.

Upon wake-up from stop2 mode, the MCU will start up as from a power-on reset (POR) except pin states remain latched. The CPU will take the reset vector. The system and all peripherals will be in their default reset states and must be initialized.

After waking up from stop2, the PPDF bit in SPMSC2 is set. This flag may be used to direct user code to go to a stop2 recovery routine. PPDF remains set and the I/O pin states remain latched until a 1 is written to PPDACK in SPMSC2.

To maintain I/O state for pins that were configured as general-purpose I/O, the user must restore the contents of the I/O port registers, which have been saved in RAM, to the port registers before writing to the PPDACK bit. If the port registers are not restored from RAM before writing to PPDACK, then the register bits will assume their reset states when the I/O pin latches are opened and the I/O pins will switch to their reset states.

For pins that were configured as peripheral I/O, the user must reconfigure the peripheral module that interfaces to the pin before writing to the PPDACK bit. If the peripheral module is not enabled before writing to PPDACK, the pins will be controlled by their associated port control registers when the I/O latches are opened.

3.6.3 Stop3 Mode

Upon entering the stop3 mode, all of the clocks in the MCU, including the oscillator itself, are halted. The ICG is turned off, the ATD is disabled, and the voltage regulator is put in standby. The states of all of the internal registers and logic, as well as the RAM content, are maintained. The I/O pin states are not latched at the pin as in stop2. Instead they are maintained by virtue of the states of the internal logic driving the pins being maintained.

Exit from stop3 is performed by asserting $\overline{\text{RESET}}$, an asynchronous interrupt pin, or through the real-time interrupt. The asynchronous interrupt pins are the IRQ or KBI pins.

If stop3 is exited by means of the $\overline{\text{RESET}}$ pin, then the MCU will be reset and operation will resume after taking the reset vector. Exit by means of an asynchronous interrupt or the real-time interrupt will result in the MCU taking the appropriate interrupt vector.

A separate self-clocked source (≈1 kHz) for the real-time interrupt allows a wakeup from stop2 or stop3 mode with no external components. When RTIS2:RTIS1:RTIS0 = 0:0:0, the real-time interrupt function and this 1-kHz source are disabled. Power consumption is lower when the 1-kHz source is disabled, but in that case the real-time interrupt cannot wake the MCU from stop.

3.6.4 Active BDM Enabled in Stop Mode

Entry into the active background mode from run mode is enabled if the ENBDM bit in BDCSCR is set. This register is described in the Chapter 15, "Development Support," section of this data sheet. If ENBDM is set when the CPU executes a STOP instruction, the system clocks to the background debug logic remain active when the MCU enters stop mode so background debug communication is still possible. In addition, the voltage regulator does not enter its low-power standby state but maintains full internal regulation. If the user attempts to enter either stop1 or stop2 with ENBDM set, the MCU will instead enter stop3.

Most background commands are not available in stop mode. The memory-access-with-status commands do not allow memory access, but they report an error indicating that the MCU is in either stop or wait mode. The BACKGROUND command can be used to wake the MCU from stop and enter active background mode if the ENBDM bit is set. After the device enters background debug mode, all background commands are available. The table below summarizes the behavior of the MCU in stop when entry into the background debug mode is enabled.

Table 3-2. BDM Enabled Stop Mode Behavior

Mode	PDC	PPDC	CPU, Digital Peripherals, Flash	RAM	ICG	ATD	Regulator	I/O Pins	RTI[1]
Stop3	Don't care	Don't care	Standby	Standby	Active	Disabled[2]	Active	States held	Optionally on

[1] The 1 kHz internal RTI clock is not available in stop3 with active BDM enabled.

[2] Either ATD stop mode or power-down mode depending on the state of ATDPU.

3.6.5 LVD Enabled in Stop Mode

The LVD system is capable of generating either an interrupt or a reset when the supply voltage drops below the LVD voltage. If the LVD is enabled in stop by setting the LVDE and the LVDSE bits in SPMSC1 when the CPU executes a STOP instruction, then the voltage regulator remains active during stop mode. If the user attempts to enter either stop1 or stop2 with the LVD enabled for stop (LVDSE = 1), the MCU will instead enter stop3. The table below summarizes the behavior of the MCU in stop when the LVD is enabled.

Table 3-3. LVD Enabled Stop Mode Behavior

Mode	PDC	PPDC	CPU, Digital Peripherals, Flash	RAM	ICG	ATD	Regulator	I/O Pins	RTI
Stop3	Don't care	Don't care	Standby	Standby	Standby	Disabled[1]	Active	States held	Optionally on

[1] Either ATD stop mode or power-down mode depending on the state of ATDPU.

3.6.6 On-Chip Peripheral Modules in Stop Modes

When the MCU enters any stop mode, system clocks to the internal peripheral modules are stopped. Even in the exception case (ENBDM = 1), where clocks to the background debug logic continue to operate,

clocks to the peripheral systems are halted to reduce power consumption. Refer to Section 3.6.1, "Stop1 Mode," Section 3.6.2, "Stop2 Mode," and Section 3.6.3, "Stop3 Mode," for specific information on system behavior in stop modes.

I/O Pins

- All I/O pin states remain unchanged when the MCU enters stop3 mode.
- If the MCU is configured to go into stop2 mode, all I/O pins states are latched before entering stop.
- If the MCU is configured to go into stop1 mode, all I/O pins are forced to their default reset state upon entry into stop.

Memory

- All RAM and register contents are preserved while the MCU is in stop3 mode.
- All registers will be reset upon wake-up from stop2, but the contents of RAM are preserved and pin states remain latched until the PPDACK bit is written. The user may save any memory-mapped register data into RAM before entering stop2 and restore the data upon exit from stop2.
- All registers will be reset upon wake-up from stop1 and the contents of RAM are not preserved. The MCU must be initialized as upon reset. The contents of the flash memory are nonvolatile and are preserved in any of the stop modes.

ICG — In stop3 mode, the ICG enters its low-power standby state. Either the oscillator or the internal reference may be kept running when the ICG is in standby by setting the appropriate control bit. In both stop2 and stop1 modes, the ICG is turned off. Neither the oscillator nor the internal reference can be kept running in stop2 or stop1, even if enabled within the ICG module.

TPM — When the MCU enters stop mode, the clock to the TPM1 and TPM2 modules stop. The modules halt operation. If the MCU is configured to go into stop2 or stop1 mode, the TPM modules will be reset upon wake-up from stop and must be reinitialized.

ATD — When the MCU enters stop mode, the ATD will enter a low-power standby state**.** No conversion operation will occur while in stop. If the MCU is configured to go into stop2 or stop1 mode, the ATD will be reset upon wake-up from stop and must be reinitialized.

KBI — During stop3, the KBI pins that are enabled continue to function as interrupt sources that are capable of waking the MCU from stop3. The KBI is disabled in stop1 and stop2 and must be reinitialized after waking up from either of these modes.

RTI — During stop2 and stop3, the RTI continues to operate as an interrupt wakeup source. During stop1, the RTI is disabled. In stop2, the RTI uses the internal 1 kHz RTI clock, but in stop3 mode, the RTI uses either the external clock or the internal RTI clock. When the active BDM mode is enabled though, the internal RTI clock is not operational.

SCI — When the MCU enters stop mode, the clocks to the SCI1 and SCI2 modules stop. The modules halt operation. If the MCU is configured to go into stop2 or stop1 mode, the SCI modules will be reset upon wake-up from stop and must be reinitialized.

SPI — When the MCU enters stop mode, the clocks to the SPI module stop. The module halts operation. If the MCU is configured to go into stop2 or stop1 mode, the SPI module will be reset upon wake-up from stop and must be reinitialized.

IIC — When the MCU enters stop mode, the clocks to the IIC module stops. The module halts operation. If the MCU is configured to go into stop2 or stop1 mode, the IIC module will be reset upon wake-up from stop and must be reinitialized.

Voltage Regulator — The voltage regulator enters a low-power standby state when the MCU enters any of the stop modes unless the LVD is enabled in stop mode or BDM is enabled.

Chapter 4
Memory

4.1 MC9S08GBxxA/GTxxA Memory Map

As shown in Figure 4-1, on-chip memory in the MC9S08GBxxA/GTxxA series of MCUs consists of RAM, flash program memory for nonvolatile data storage, plus I/O and control/status registers. The registers are divided into three groups:

- Direct-page registers (0x0000 through 0x007F)
- High-page registers (0x1800 through 0x182B)
- Nonvolatile registers (0xFFB0 through 0xFFBF)

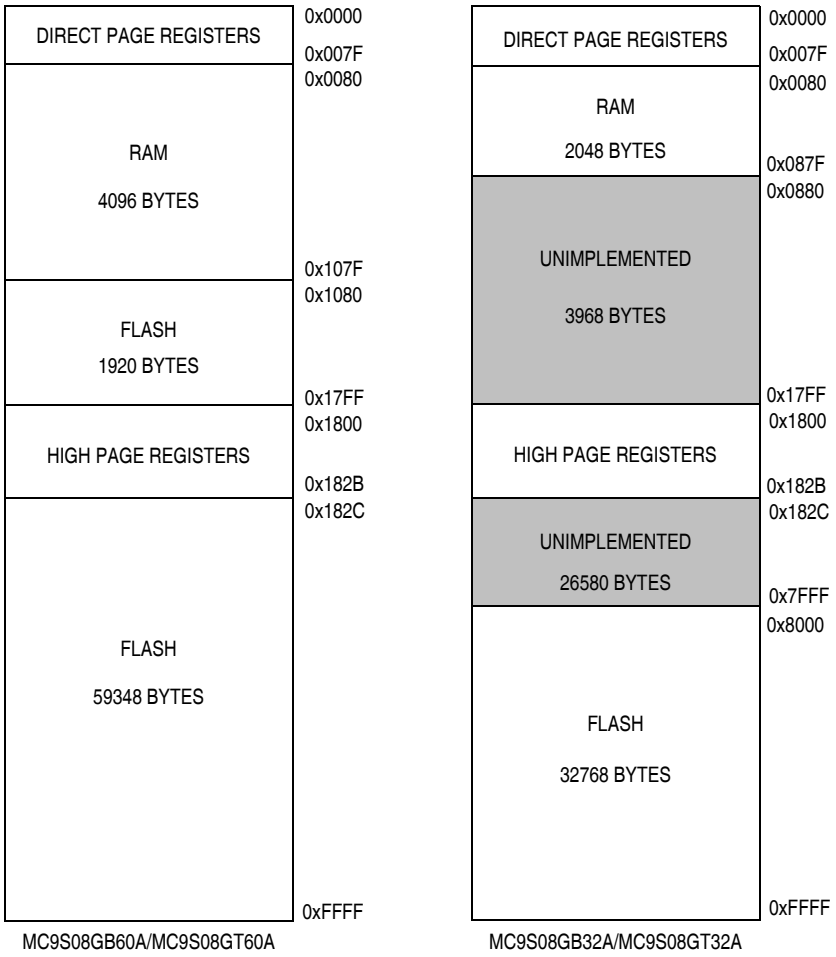

Figure 4-1. MC9S08GBxxA/GTxxA Memory Map

4.1.1 Reset and Interrupt Vector Assignments

Table 4-1 shows address assignments for reset and interrupt vectors. The vector names shown in this table are the labels used in the Freescale-provided equate file for the MC9S08GBxxA/GTxxA. For more details about resets, interrupts, interrupt priority, and local interrupt mask controls, refer to Chapter 5, "Resets, Interrupts, and System Configuration."

Table 4-1. Reset and Interrupt Vectors

Address (High/Low)	Vector	Vector Name
0xFFC0:FFC1 ↕ 0xFFCA:FFCB	Unused Vector Space (available for user program)	
0xFFCC:FFCD	RTI	Vrti
0xFFCE:FFCF	IIC	Viic1
0xFFD0:FFD1	ATD Conversion	Vatd1
0xFFD2:FFD3	Keyboard	Vkeyboard1
0xFFD4:FFD5	SCI2 Transmit	Vsci2tx
0xFFD6:FFD7	SCI2 Receive	Vsci2rx
0xFFD8:FFD9	SCI2 Error	Vsci2err
0xFFDA:FFDB	SCI1 Transmit	Vsci1tx
0xFFDC:FFDD	SCI1 Receive	Vsci1rx
0xFFDE:FFDF	SCI1 Error	Vsci1err
0xFFE0:FFE1	SPI	Vspi1
0xFFE2:FFE3	TPM2 Overflow	Vtpm2ovf
0xFFE4:FFE5	TPM2 Channel 4	Vtpm2ch4
0xFFE6:FFE7	TPM2 Channel 3	Vtpm2ch3
0xFFE8:FFE9	TPM2 Channel 2	Vtpm2ch2
0xFFEA:FFEB	TPM2 Channel 1	Vtpm2ch1
0xFFEC:FFED	TPM2 Channel 0	Vtpm2ch0
0xFFEE:FFEF	TPM1 Overflow	Vtpm1ovf
0xFFF0:FFF1	TPM1 Channel 2	Vtpm1ch2
0xFFF2:FFF3	TPM1 Channel 1	Vtpm1ch1
0xFFF4:FFF5	TPM1 Channel 0	Vtpm1ch0
0xFFF6:FFF7	ICG	Vicg
0xFFF8:FFF9	Low Voltage Detect	Vlvd
0xFFFA:FFFB	IRQ	Virq
0xFFFC:FFFD	SWI	Vswi
0xFFFE:FFFF	Reset	Vreset

4.2 Register Addresses and Bit Assignments

The registers in the MC9S08GBxxA/GTxxA are divided into these three groups:

- Direct-page registers are located in the first 128 locations in the memory map, so they are accessible with efficient direct addressing mode instructions.
- High-page registers are used much less often, so they are located above 0x1800 in the memory map. This leaves more room in the direct page for more frequently used registers and variables.
- The nonvolatile register area consists of a block of 16 locations in flash memory at 0xFFB0–0xFFBF.

  Nonvolatile register locations include:

  — Three values which are loaded into working registers at reset

  — An 8-byte backdoor comparison key which optionally allows a user to gain controlled access to secure memory

  Because the nonvolatile register locations are flash memory, they must be erased and programmed like other flash memory locations.

Direct-page registers can be accessed with efficient direct addressing mode instructions. Bit manipulation instructions can be used to access any bit in any direct-page register. Table 4-2 is a summary of all user-accessible direct-page registers and control bits.

The direct page registers in Table 4-2 can use the more efficient direct addressing mode which only requires the lower byte of the address. Because of this, the lower byte of the address in column one is shown in bold text. In Table 4-3 and Table 4-4 the whole address in column one is shown in bold. In Table 4-2, Table 4-3, and Table 4-4, the register names in column two are shown in bold to set them apart from the bit names to the right. Cells that are not associated with named bits are shaded. A shaded cell with a 0 indicates this unused bit always reads as a 0. Shaded cells with dashes indicate unused or reserved bit locations that could read as 1s or 0s.

Table 4-2. Direct-Page Register Summary (Sheet 1 of 3)

Address	Register Name	Bit 7	6	5	4	3	2	1	Bit 0
0x0000	**PTAD**	PTAD7	PTAD6	PTAD5	PTAD4	PTAD3	PTAD2	PTAD1	PTAD0
0x0001	**PTAPE**	PTAPE7	PTAPE6	PTAPE5	PTAPE4	PTAPE3	PTAPE2	PTAPE1	PTAPE0
0x0002	**PTASE**	PTASE7	PTASE6	PTASE5	PTASE4	PTASE3	PTASE2	PTASE1	PTASE0
0x0003	**PTADD**	PTADD7	PTADD6	PTADD5	PTADD4	PTADD3	PTADD2	PTADD1	PTADD0
0x0004	**PTBD**	PTBD7	PTBD6	PTBD5	PTBD4	PTBD3	PTBD2	PTBD1	PTBD0
0x0005	**PTBPE**	PTBPE7	PTBPE6	PTBPE5	PTBPE4	PTBPE3	PTBPE2	PTBPE1	PTBPE0
0x0006	**PTBSE**	PTBSE7	PTBSE6	PTBSE5	PTBSE4	PTBSE3	PTBSE2	PTBSE1	PTBSE0
0x0007	**PTBDD**	PTBDD7	PTBDD6	PTBDD5	PTBDD4	PTBDD3	PTBDD2	PTBDD1	PTBDD0
0x0008	**PTCD**	PTCD7	PTCD6	PTCD5	PTCD4	PTCD3	PTCD2	PTCD1	PTCD0
0x0009	**PTCPE**	PTCPE7	PTCPE6	PTCPE5	PTCPE4	PTCPE3	PTCPE2	PTCPE1	PTCPE0
0x000A	**PTCSE**	PTCSE7	PTCSE6	PTCSE5	PTCSE4	PTCSE3	PTCSE2	PTCSE1	PTCSE0
0x000B	**PTCDD**	PTCDD7	PTCDD6	PTCDD5	PTCDD4	PTCDD3	PTCDD2	PTCDD1	PTCDD0
0x000C	**PTDD**	PTDD7	PTDD6	PTDD5	PTDD4	PTDD3	PTDD2	PTDD1	PTDD0
0x000D	**PTDPE**	PTDPE7	PTDPE6	PTDPE5	PTDPE4	PTDPE3	PTDPE2	PTDPE1	PTDPE0
0x000E	**PTDSE**	PTDSE7	PTDSE6	PTDSE5	PTDSE4	PTDSE3	PTDSE2	PTDSE1	PTDSE0
0x000F	**PTDDD**	PTDDD7	PTDDD6	PTDDD5	PTDDD4	PTDDD3	PTDDD2	PTDDD1	PTDDD0
0x0010	**PTED**	PTED7	PTED6	PTED5	PTED4	PTED3	PTED2	PTED1	PTED0
0x0011	**PTEPE**	PTEPE7	PTEPE6	PTEPE5	PTEPE4	PTEPE3	PTEPE2	PTEPE1	PTEPE0
0x0012	**PTESE**	PTESE7	PTESE6	PTESE5	PTESE4	PTESE3	PTESE2	PTESE1	PTESE0
0x0013	**PTEDD**	PTEDD7	PTEDD6	PTEDD5	PTEDD4	PTEDD3	PTEDD2	PTEDD1	PTEDD0
0x0014	**IRQSC**	0	0	IRQEDG	IRQPE	IRQF	IRQACK	IRQIE	IRQMOD
0x0015	Reserved	—	—	—	—	—	—	—	—
0x0016	**KBI1SC**	KBEDG7	KBEDG6	KBEDG5	KBEDG4	KBF	KBACK	KBIE	KBIMOD
0x0017	**KBI1PE**	KBIPE7	KBIPE6	KBIPE5	KBIPE4	KBIPE3	KBIPE2	KBIPE1	KBIPE0
0x0018	**SCI1BDH**	0	0	0	SBR12	SBR11	SBR10	SBR9	SBR8
0x0019	**SCI1BDL**	SBR7	SBR6	SBR5	SBR4	SBR3	SBR2	SBR1	SBR0
0x001A	**SCI1C1**	LOOPS	SCISWAI	RSRC	M	WAKE	ILT	PE	PT
0x001B	**SCI1C2**	TIE	TCIE	RIE	ILIE	TE	RE	RWU	SBK
0x001C	**SCI1S1**	TDRE	TC	RDRF	IDLE	OR	NF	FE	PF
0x001D	**SCI1S2**	0	0	0	0	0	0	0	RAF
0x001E	**SCI1C3**	R8	T8	TXDIR	0	ORIE	NEIE	FEIE	PEIE
0x001F	**SCI1D**	Bit 7	6	5	4	3	2	1	Bit 0
0x0020	**SCI2BDH**	0	0	0	SBR12	SBR11	SBR10	SBR9	SBR8
0x0021	**SCI2BDL**	SBR7	SBR6	SBR5	SBR4	SBR3	SBR2	SBR1	SBR0
0x0022	**SCI2C1**	LOOPS	SCISWAI	RSRC	M	WAKE	ILT	PE	PT
0x0023	**SCI2C2**	TIE	TCIE	RIE	ILIE	TE	RE	RWU	SBK
0x0024	**SCI2S1**	TDRE	TC	RDRF	IDLE	OR	NF	FE	PF
0x0025	**SCI2S2**	0	0	0	0	0	0	0	RAF
0x0026	**SCI2C3**	R8	T8	TXDIR	0	ORIE	NEIE	FEIE	PEIE
0x0027	**SCI2D**	Bit 7	6	5	4	3	2	1	Bit 0

Table 4-2. Direct-Page Register Summary (Sheet 2 of 3)

Address	Register Name	Bit 7	6	5	4	3	2	1	Bit 0
0x0028	**SPI1C1**	SPIE	SPE	SPTIE	MSTR	CPOL	CPHA	SSOE	LSBFE
0x0029	**SPI1C2**	0	0	0	MODFEN	BIDIROE	0	SPISWAI	SPC0
0x002A	**SPI1BR**	0	SPPR2	SPPR1	SPPR0	0	SPR2	SPR1	SPR0
0x002B	**SPI1S**	SPRF	0	SPTEF	MODF	0	0	0	0
0x002C	Reserved	0	0	0	0	0	0	0	0
0x002D	**SPI1D**	Bit 7	6	5	4	3	2	1	Bit 0
0x002E	Reserved	0	0	0	0	0	0	0	0
0x002F	Reserved	0	0	0	0	0	0	0	0
0x0030	**TPM1SC**	TOF	TOIE	CPWMS	CLKSB	CLKSA	PS2	PS1	PS0
0x0031	**TPM1CNTH**	Bit 15	14	13	12	11	10	9	Bit 8
0x0032	**TPM1CNTL**	Bit 7	6	5	4	3	2	1	Bit 0
0x0033	**TPM1MODH**	Bit 15	14	13	12	11	10	9	Bit 8
0x0034	**TPM1MODL**	Bit 7	6	5	4	3	2	1	Bit 0
0x0035	**TPM1C0SC**	CH0F	CH0IE	MS0B	MS0A	ELS0B	ELS0A	0	0
0x0036	**TPM1C0VH**	Bit 15	14	13	12	11	10	9	Bit 8
0x0037	**TPM1C0VL**	Bit 7	6	5	4	3	2	1	Bit 0
0x0038	**TPM1C1SC**	CH1F	CH1IE	MS1B	MS1A	ELS1B	ELS1A	0	0
0x0039	**TPM1C1VH**	Bit 15	14	13	12	11	10	9	Bit 8
0x003A	**TPM1C1VL**	Bit 7	6	5	4	3	2	1	Bit 0
0x003B	**TPM1C2SC**	CH2F	CH2IE	MS2B	MS2A	ELS2B	ELS2A	0	0
0x003C	**TPM1C2VH**	Bit 15	14	13	12	11	10	9	Bit 8
0x003D	**TPM1C2VL**	Bit 7	6	5	4	3	2	1	Bit 0
0x003E– 0x003F	Reserved	— —	— —	— —	— —	— —	— —	— —	— —
0x0040	**PTFD**	PTFD7	PTFD6	PTFD5	PTFD4	PTFD3	PTFD2	PTFD1	PTFD0
0x0041	**PTFPE**	PTFPE7	PTFPE6	PTFPE5	PTFPE4	PTFPE3	PTFPE2	PTFPE1	PTFPE0
0x0042	**PTFSE**	PTFSE7	PTFSE6	PTFSE5	PTFSE4	PTFSE3	PTFSE2	PTFSE1	PTFSE0
0x0043	**PTFDD**	PTFDD7	PTFDD6	PTFDD5	PTFDD4	PTFDD3	PTFDD2	PTFDD1	PTFDD0
0x0044	**PTGD**	PTGD7	PTGD6	PTGD5	PTGD4	PTGD3	PTGD2	PTGD1	PTGD0
0x0045	**PTGPE**	PTGPE7	PTGPE6	PTGPE5	PTGPE4	PTGPE3	PTGPE2	PTGPE1	PTGPE0
0x0046	**PTGSE**	PTGSE7	PTGSE6	PTGSE5	PTGSE4	PTGSE3	PTGSE2	PTGSE1	PTGSE0
0x0047	**PTGDD**	PTGDD7	PTGDD6	PTGDD5	PTGDD4	PTGDD3	PTGDD2	PTGDD1	PTGDD0
0x0048	**ICGC1**	HGO	RANGE	REFS	CLKS		OSCSTEN	LOCD	0
0x0049	**ICGC2**	LOLRE	MFD			LOCRE	RFD		
0x004A	**ICGS1**	CLKST		REFST	LOLS	LOCK	LOCS	ERCS	ICGIF
0x004B	**ICGS2**	0	0	0	0	0	0	0	DCOS
0x004C	**ICGFLTU**	0	0	0	0	FLT			
0x004D	**ICGFLTL**	FLT							
0x004E	**ICGTRM**	TRIM							
0x004F	Reserved	0	0	0	0	0	0	0	0

Table 4-2. Direct-Page Register Summary (Sheet 3 of 3)

Address	Register Name	Bit 7	6	5	4	3	2	1	Bit 0
0x0050	**ATD1C**	ATDPU	DJM	RES8	SGN	PRS			
0x0051	**ATD1SC**	CCF	ATDIE	ATDCO	ATDCH				
0x0052	**ATD1RH**	Bit 7	6	5	4	3	2	1	Bit 0
0x0053	**ATD1RL**	Bit 7	6	5	4	3	2	1	Bit 0
0x0054	**ATD1PE**	ATDPE7	ATDPE6	ATDPE5	ATDPE4	ATDPE3	ATDPE2	ATDPE1	ATDPE0
0x0055– 0x0057	Reserved	— —	— —	— —	— —	— —	— —	— —	— —
0x0058	**IIC1A**	ADDR							0
0x0059	**IIC1F**	MULT		ICR					
0x005A	**IIC1C**	IICEN	IICIE	MST	TX	TXAK	RSTA	0	0
0x005B	**IIC1S**	TCF	IAAS	BUSY	ARBL	0	SRW	IICIF	RXAK
0x005C	**IIC1D**	DATA							
0x005D– 0x005F	Reserved	— —	— —	— —	— —	— —	— —	— —	— —
0x0060	**TPM2SC**	TOF	TOIE	CPWMS	CLKSB	CLKSA	PS2	PS1	PS0
0x0061	**TPM2CNTH**	Bit 15	14	13	12	11	10	9	Bit 8
0x0062	**TPM2CNTL**	Bit 7	6	5	4	3	2	1	Bit 0
0x0063	**TPM2MODH**	Bit 15	14	13	12	11	10	9	Bit 8
0x0064	**TPM2MODL**	Bit 7	6	5	4	3	2	1	Bit 0
0x0065	**TPM2C0SC**	CH0F	CH0IE	MS0B	MS0A	ELS0B	ELS0A	0	0
0x0066	**TPM2C0VH**	Bit 15	14	13	12	11	10	9	Bit 8
0x0067	**TPM2C0VL**	Bit 7	6	5	4	3	2	1	Bit 0
0x0068	**TPM2C1SC**	CH1F	CH1IE	MS1B	MS1A	ELS1B	ELS1A	0	0
0x0069	**TPM2C1VH**	Bit 15	14	13	12	11	10	9	Bit 8
0x006A	**TPM2C1VL**	Bit 7	6	5	4	3	2	1	Bit 0
0x006B	**TPM2C2SC**	CH2F	CH2IE	MS2B	MS2A	ELS2B	ELS2A	0	0
0x006C	**TPM2C2VH**	Bit 15	14	13	12	11	10	9	Bit 8
0x006D	**TPM2C2VL**	Bit 7	6	5	4	3	2	1	Bit 0
0x006E	**TPM2C3SC**	CH3F	CH3IE	MS3B	MS3A	ELS3B	ELS3A	0	0
0x006F	**TPM2C3VH**	Bit 15	14	13	12	11	10	9	Bit 8
0x0070	**TPM2C3VL**	Bit 7	6	5	4	3	2	1	Bit 0
0x0071	**TPM2C4SC**	CH4F	CH4IE	MS4B	MS4A	ELS4B	ELS4A	0	0
0x0072	**TPM2C4VH**	Bit 15	14	13	12	11	10	9	Bit 8
0x0073	**TPM2C4VL**	Bit 7	6	5	4	3	2	1	Bit 0
0x0074– 0x007F	Reserved	— —	— —	— —	— —	— —	— —	— —	— —

High-page registers, shown in Table 4-3, are accessed much less often than other I/O and control registers so they have been located outside the direct addressable memory space, starting at 0x1800.

Table 4-3. High-Page Register Summary

Address	Register Name	Bit 7	6	5	4	3	2	1	Bit 0
0x1800	SRS	POR	PIN	COP	ILOP	0	ICG	LVD	0
0x1801	SBDFR	0	0	0	0	0	0	0	BDFR
0x1802	SOPT	COPE	COPT	STOPE	—	0	0	BKGDPE	—
0x1803 – 0x1805	Reserved	— —	— —	— —	— —	— —	— —	— —	— —
0x1806	SDIDH	REV3	REV2	REV1	REV0	ID11	ID10	ID9	ID8
0x1807	SDIDL	ID7	ID6	ID5	ID4	ID3	ID2	ID1	ID0
0x1808	SRTISC	RTIF	RTIACK	RTICLKS	RTIE	0	RTIS2	RTIS1	RTIS0
0x1809	SPMSC1	LVDF	LVDACK	LVDIE	LVDRE	LVDSE	LVDE	0	0
0x180A	SPMSC2	LVWF	LVWACK	LVDV	LVWV	PPDF	PPDACK	PDC	PPDC
0x180B– 0x180F	Reserved	— —	— —	— —	— —	— —	— —	— —	— —
0x1810	DBGCAH	Bit 15	14	13	12	11	10	9	Bit 8
0x1811	DBGCAL	Bit 7	6	5	4	3	2	1	Bit 0
0x1812	DBGCBH	Bit 15	14	13	12	11	10	9	Bit 8
0x1813	DBGCBL	Bit 7	6	5	4	3	2	1	Bit 0
0x1814	DBGFH	Bit 15	14	13	12	11	10	9	Bit 8
0x1815	DBGFL	Bit 7	6	5	4	3	2	1	Bit 0
0x1816	DBGC	DBGEN	ARM	TAG	BRKEN	RWA	RWAEN	RWB	RWBEN
0x1817	DBGT	TRGSEL	BEGIN	0	0	TRG3	TRG2	TRG1	TRG0
0x1818	DBGS	AF	BF	ARMF	0	CNT3	CNT2	CNT1	CNT0
0x1819– 0x181F	Reserved	— —	— —	— —	— —	— —	— —	— —	— —
0x1820	FCDIV	DIVLD	PRDIV8	DIV5	DIV4	DIV3	DIV2	DIV1	DIV0
0x1821	FOPT	KEYEN	FNORED	0	0	0	0	SEC01	SEC00
0x1822	Reserved	—	—	—	—	—	—	—	—
0x1823	FCNFG	0	0	KEYACC	0	0	0	0	0
0x1824	FPROT	FPOPEN	FPDIS	FPS2	FPS1	FPS0	0	0	0
0x1825	FSTAT	FCBEF	FCCF	FPVIOL	FACCERR	0	FBLANK	0	0
0x1826	FCMD	FCMD7	FCMD6	FCMD5	FCMD4	FCMD3	FCMD2	FCMD1	FCMD0
0x1827– 0x182B	Reserved	— —	— —	— —	— —	— —	— —	— —	— —

Nonvolatile flash registers, shown in Table 4-4, are located in the flash memory. These registers include an 8-byte backdoor key which optionally can be used to gain access to secure memory resources. During reset events, the contents of NVPROT and NVOPT in the nonvolatile register area of the flash memory are transferred into corresponding FPROT and FOPT working registers in the high-page registers to control security and block protection options.

Table 4-4. Nonvolatile Register Summary

Address	Register Name	Bit 7	6	5	4	3	2	1	Bit 0
0xFFB0 – 0xFFB7	**NVBACKKEY**	8-Byte Comparison Key							
0xFFB8 – 0xFFBC	Reserved	— —	— —	— —	— —	— —	— —	— —	— —
0xFFBD	**NVPROT**	FPOPEN	FPDIS	FPS2	FPS1	FPS0	0	0	0
0xFFBE	Reserved[1]	—	—	—	—	—	—	—	—
0xFFBF	**NVOPT**	KEYEN	FNORED	0	0	0	0	SEC01	SEC00

[1] This location is used to store the factory trim value for the ICG.

Provided the key enable (KEYEN) bit is 1, the 8-byte comparison key can be used to temporarily disengage memory security. This key mechanism can be accessed only through user code running in secure memory. (A security key cannot be entered directly through background debug commands.) This security key can be disabled completely by programming the KEYEN bit to 0. If the security key is disabled, the only way to disengage security is by mass erasing the flash if needed (normally through the background debug interface) and verifying that flash is blank. To avoid returning to secure mode after the next reset, program the security bits (SEC01:SEC00) to the unsecured state (1:0).

4.3 RAM

The MC9S08GBxxA/GTxxA includes static RAM. The locations in RAM below 0x0100 can be accessed using the more efficient direct addressing mode, and any single bit in this area can be accessed with the bit manipulation instructions (BCLR, BSET, BRCLR, and BRSET). Locating the most frequently accessed program variables in this area of RAM is preferred.

The RAM retains data when the MCU is in low-power wait, stop2, or stop3 mode. At power-on or after wakeup from stop1, the contents of RAM are uninitialized. RAM data is unaffected by any reset provided that the supply voltage does not drop below the minimum value for RAM retention.

For compatibility with older M68HC05 MCUs, the HCS08 resets the stack pointer to 0x00FF. In the MC9S08GBxxA/GTxxA, it is usually best to re-initialize the stack pointer to the top of the RAM so the direct page RAM can be used for frequently accessed RAM variables and bit-addressable program variables. Include the following 2-instruction sequence in your reset initialization routine (where RamLast is equated to the highest address of the RAM in the Freescale-provided equate file).

```
LDHX     #RamLast+1    ;point one past RAM
TXS                    ;SP<-(H:X-1)
```

When security is enabled, the RAM is considered a secure memory resource and is not accessible through BDM or through code executing from non-secure memory. See Section 4.5, “Security” for a detailed description of the security feature.

4.4 Flash

The flash memory is intended primarily for program storage. In-circuit programming allows the operating program to be loaded into the flash memory after final assembly of the application product. It is possible

to program the entire array through the single-wire background debug interface. Because no special voltages are needed for flash erase and programming operations, in-application programming is also possible through other software-controlled communication paths. For a more detailed discussion of in-circuit and in-application programming, refer to the *HCS08 Family Reference Manual, Volume I,* Freescale Semiconductor document order number HCS08RMv1/D.

4.4.1 Features

Features of the flash memory include:

- Flash Size
  - — MC9S08GB60A/MC9S08GT60A — 61268 bytes (120 pages of 512 bytes each)
  - — MC9S08GB32A/MC9S08GT32A— 32768 bytes (64 pages of 512 bytes each)
- Single power supply program and erase
- Command interface for fast program and erase operation
- Up to 100,000 program/erase cycles at typical voltage and temperature
- Flexible block protection
- Security feature for flash and RAM
- Auto power-down for low-frequency read accesses

4.4.2 Program and Erase Times

Before any program or erase command can be accepted, the flash clock divider register (FCDIV) must be written to set the internal clock for the flash module to a frequency (f_{FCLK}) between 150 kHz and 200 kHz (see Table 4.6.1). This register can be written only once, so normally this write is done during reset initialization. FCDIV cannot be written if the access error flag, FACCERR in FSTAT, is set. The user must ensure that FACCERR is not set before writing to the FCDIV register. One period of the resulting clock ($1/f_{FCLK}$) is used by the command processor to time program and erase pulses. An integer number of these timing pulses is used by the command processor to complete a program or erase command.

Table 4-5 shows program and erase times. The bus clock frequency and FCDIV determine the frequency of FCLK (f_{FCLK}). The time for one cycle of FCLK is $t_{FCLK} = 1/f_{FCLK}$. The times are shown as a number of cycles of FCLK and as an absolute time for the case where $t_{FCLK} = 5$ µs. Program and erase times shown include overhead for the command state machine and enabling and disabling of program and erase voltages.

Table 4-5. Program and Erase Times

Parameter	Cycles of FCLK	Time if FCLK = 200 kHz
Byte program	9	45 µs
Byte program (burst)	4	20 µs[1]
Page erase	4000	20 ms
Mass erase	20,000	100 ms

[1] Excluding start/end overhead

4.4.3 Program and Erase Command Execution

The steps for executing any of the commands are listed below. The FCDIV register must be initialized and any error flags cleared before beginning command execution. The command execution steps are:

1. Write a data value to an address in the flash array. The address and data information from this write is latched into the flash interface. This write is a required first step in any command sequence. For erase and blank check commands, the value of the data is not important. For page erase commands, the address may be any address in the 512-byte page of flash to be erased. For mass erase and blank check commands, the address can be any address in the flash memory. Whole pages of 512 bytes are the smallest blocks of flash that may be erased. In the 60K version, there are two instances where the size of a block that is accessible to the user is less than 512 bytes: the first page following RAM, and the first page following the high page registers. These pages are overlapped by the RAM and high page registers, respectively.

NOTE

Do not program any byte in the flash more than once after a successful erase operation. Reprogramming bits in a byte which is already programmed is not allowed without first erasing the page in which the byte resides or mass erasing the entire flash memory. Programming without first erasing may disturb data stored in the flash.

2. Write the command code for the desired command to FCMD. The five valid commands are blank check (0x05), byte program (0x20), burst program (0x25), page erase (0x40), and mass erase (0x41). The command code is latched into the command buffer.
3. Write a 1 to the FCBEF bit in FSTAT to clear FCBEF and launch the command (including its address and data information).

A partial command sequence can be aborted manually by writing a 0 to FCBEF any time after the write to the memory array and before writing the 1 that clears FCBEF and launches the complete command. Aborting a command in this way sets the FACCERR access error flag which must be cleared before starting a new command.

A strictly monitored procedure must be adhered to, or the command will not be accepted. This minimizes the possibility of any unintended change to the flash memory contents. The command complete flag (FCCF) indicates when a command is complete. The command sequence must be completed by clearing FCBEF to launch the command. Figure 4-2 is a flowchart for executing all of the commands except for burst programming. The FCDIV register must be initialized before using any flash commands. This must be done only once following a reset.

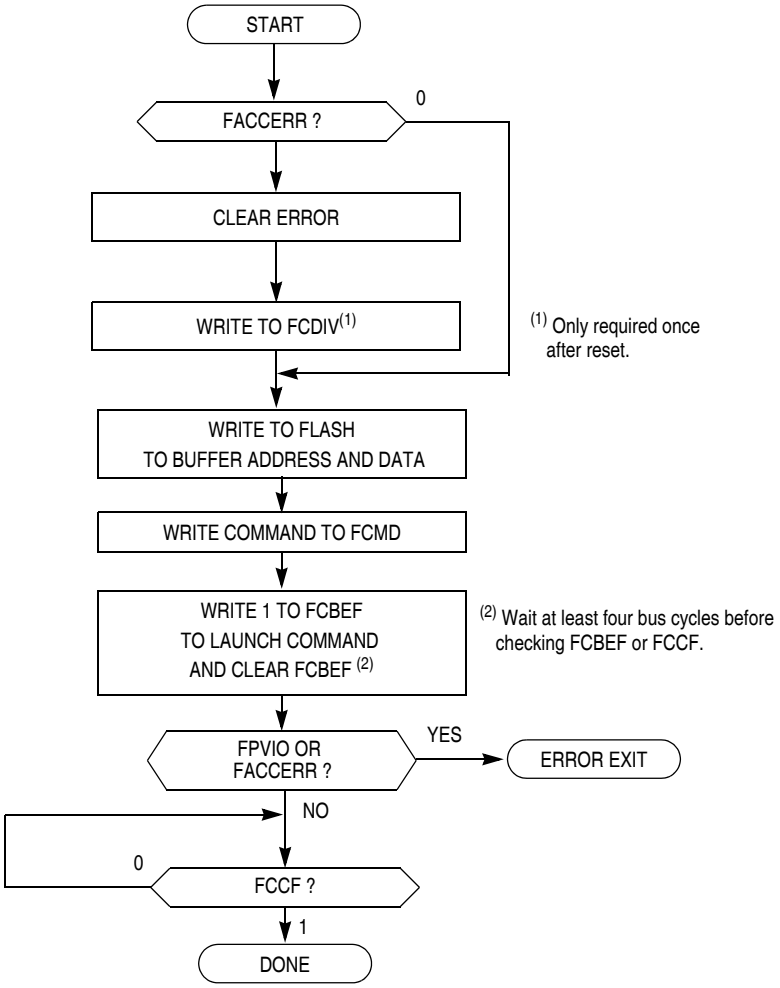

Figure 4-2. Flash Program and Erase Flowchart

4.4.4 Burst Program Execution

The burst program command is used to program sequential bytes of data in less time than would be required using the standard program command. This is possible because the high voltage to the flash array does not need to be disabled between program operations. Ordinarily, when a program or erase command is issued, an internal charge pump associated with the flash memory must be enabled to supply high voltage to the array. Upon completion of the command, the charge pump is turned off. When a burst program command is issued, the charge pump is enabled and then remains enabled after completion of the burst program operation if the following two conditions are met:

1. The next burst program command has been queued before the current program operation has completed.
2. The next sequential address selects a byte on the same physical row as the current byte being programmed. A row of flash memory consists of 64 bytes. A byte within a row is selected by addresses A5 through A0. A new row begins when addresses A5 through A0 are all zero.

The first byte of a series of sequential bytes being programmed in burst mode will take the same amount of time to program as a byte programmed in standard mode. Subsequent bytes will program in the burst

program time provided that the conditions above are met. In the case the next sequential address is the beginning of a new row, the program time for that byte will be the standard time instead of the burst time. This is because the high voltage to the array must be disabled and then enabled again. If a new burst command has not been queued before the current command completes, then the charge pump will be disabled and high voltage removed from the array.

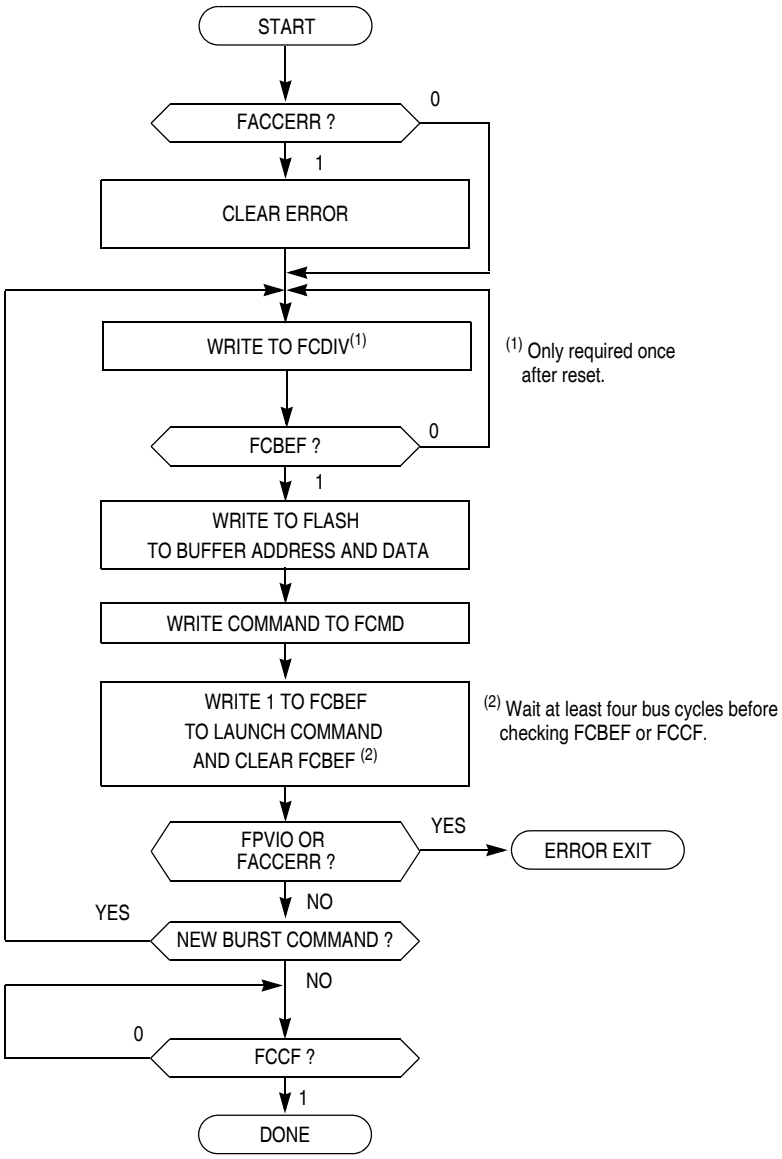

Figure 4-3. Flash Burst Program Flowchart

4.4.5 Access Errors

An access error occurs whenever the command execution protocol is violated.

Any of the following specific actions will cause the access error flag (FACCERR) in FSTAT to be set. FACCERR must be cleared by writing a 1 to FACCERR in FSTAT before any command can be processed.

- Writing to a flash address before the internal flash clock frequency has been set by writing to the FCDIV register
- Writing to a flash address while FCBEF is not set (A new command cannot be started until the command buffer is empty.)
- Writing a second time to a flash address before launching the previous command (There is only one write to flash for every command.)
- Writing a second time to FCMD before launching the previous command (There is only one write to FCMD for every command.)
- Writing to any flash control register other than FCMD after writing to a flash address
- Writing any command code other than the five allowed codes (0x05, 0x20, 0x25, 0x40, or 0x41) to FCMD
- Accessing (read or write) any flash control register other than the write to FSTAT (to clear FCBEF and launch the command) after writing the command to FCMD
- The MCU enters stop mode while a program or erase command is in progress (The command is aborted.)
- Writing the byte program, burst program, or page erase command code (0x20, 0x25, or 0x40) with a background debug command while the MCU is secured (The background debug controller can only do blank check and mass erase commands when the MCU is secure.)
- Writing 0 to FCBEF to cancel a partial command

4.4.6 Flash Block Protection

Block protection prevents program or erase changes for flash memory locations in a designated address range. Mass erase is disabled when any block of flash is protected. The MC9S08GBxxA/GTxxA allows a block of memory at the end of flash, and/or the entire flash memory to be block protected. A disable control bit and a 3-bit control field, allows the user to set the size of this block. A separate control bit allows block protection of the entire flash memory array. All seven of these control bits are located in the FPROT register (see Section 4.6.4, “Flash Protection Register (FPROT and NVPROT)”).

At reset, the high-page register (FPROT) is loaded with the contents of the NVPROT location which is in the nonvolatile register block of the flash memory. The value in FPROT cannot be changed directly from application software so a runaway program cannot alter the block protection settings. If the last 512 bytes of flash which includes the NVPROT register is protected, the application program cannot alter the block protection settings (intentionally or unintentionally). The FPROT control bits can be written by background debug commands to allow a way to erase a protected flash memory.

One use for block protection is to block protect an area of flash memory for a bootloader program. This bootloader program then can be used to erase the rest of the flash memory and reprogram it. Because the bootloader is protected, it remains intact even if MCU power is lost in the middle of an erase and reprogram operation.

4.4.7 Vector Redirection

Whenever any block protection is enabled, the reset and interrupt vectors will be protected. Vector redirection allows users to modify interrupt vector information without unprotecting bootloader and reset vector space. Vector redirection is enabled by programming the FNORED bit in the NVOPT register located at address 0xFFBF to zero. For redirection to occur, at least some portion but not all of the flash memory must be block protected by programming the NVPROT register located at address 0xFFBD. All of the interrupt vectors (memory locations 0xFFC0–0xFFFD) are redirected, while the reset vector (0xFFFE:FFFF) is not. When more than 32K is protected, vector redirection must not be enabled.

For example, if 512 bytes of flash are protected, the protected address region is from 0xFE00 through 0xFFFF. The interrupt vectors (0xFFC0–0xFFFD) are redirected to the locations 0xFDC0–0xFDFD. Now, if an SPI interrupt is taken for instance, the values in the locations 0xFDE0:FDE1 are used for the vector instead of the values in the locations 0xFFE0:FFE1. This allows the user to reprogram the unprotected portion of the flash with new program code including new interrupt vector values while leaving the protected area, which includes the default vector locations, unchanged.

4.5 Security

The MC9S08GBxxA/GTxxA includes circuitry to prevent unauthorized access to the contents of flash and RAM memory. When security is engaged, flash and RAM are considered secure resources. Direct-page registers, high-page registers, and the background debug controller are considered unsecured resources. Programs executing within secure memory have normal access to any MCU memory locations and resources. Attempts to access a secure memory location with a program executing from an unsecured memory space or through the background debug interface are blocked (writes are ignored and reads return all 0s).

Security is engaged or disengaged based on the state of two nonvolatile register bits (SEC01:SEC00) in the FOPT register. During reset, the contents of the nonvolatile location NVOPT are copied from flash into the working FOPT register in high-page register space. A user engages security by programming the NVOPT location which can be done at the same time the flash memory is programmed. The 1:0 state disengages security while the other three combinations engage security. Notice the erased state (1:1) makes the MCU secure. During development, whenever the flash is erased, it is good practice to immediately program the SEC00 bit to 0 in NVOPT so SEC01:SEC00 = 1:0. This would allow the MCU to remain unsecured after a subsequent reset.

The on-chip debug module cannot be enabled while the MCU is secure. The separate background debug controller can still be used for background memory access commands, but the MCU cannot enter active background mode except by holding BKGD/MS low at the rising edge of reset.

A user can choose to allow or disallow a security unlocking mechanism through an 8-byte backdoor security key. If the nonvolatile KEYEN bit in NVOPT/FOPT is 0, the backdoor key is disabled and there is no way to disengage security without completely erasing all flash locations. If KEYEN is 1, a secure user program can temporarily disengage security by:

1. Writing 1 to KEYACC in the FCNFG register. This makes the flash module interpret writes to the backdoor comparison key locations (NVBACKKEY through NVBACKKEY+7) as values to be compared against the key rather than as the first step in a flash program or erase command.

2. Writing the user-entered key values to the NVBACKKEY through NVBACKKEY+7 locations. These writes must be done in order, starting with the value for NVBACKKEY and ending with NVBACKKEY+7. STHX should not be used for these writes because these writes cannot be done on adjacent bus cycles. User software normally would get the key codes from outside the MCU system through a communication interface such as a serial I/O.
3. Writing 0 to KEYACC in the FCNFG register. If the 8-byte key that was just written matches the key stored in the flash locations, SEC01:SEC00 are automatically changed to 1:0 and security will be disengaged until the next reset.

The security key can be written only from RAM, so it cannot be entered through background commands without the cooperation of a secure user program. The flash memory cannot be accessed by read operations while KEYACC is set.

The backdoor comparison key (NVBACKKEY through NVBACKKEY+7) is located in flash memory locations in the nonvolatile register space so users can program these locations just as they would program any other flash memory location. The nonvolatile registers are in the same 512-byte block of flash as the reset and interrupt vectors, so block protecting that space also block protects the backdoor comparison key. Block protects cannot be changed from user application programs, so if the vector space is block protected, the backdoor security key mechanism cannot permanently change the block protect, security settings, or the backdoor key.

Security can always be disengaged through the background debug interface by performing these steps:

1. Disable any block protections by writing FPROT. FPROT can be written only with background debug commands, not from application software.
2. Mass erase flash, if necessary.
3. Blank check flash. Provided flash is completely erased, security is disengaged until the next reset.

   To avoid returning to secure mode after the next reset, program NVOPT so SEC01:SEC00 = 1:0.

4.6 Flash Registers and Control Bits

The flash module has nine 8-bit registers in the high-page register space, three locations in the nonvolatile register space in flash memory that are copied into three corresponding high-page control registers at reset. There is also an 8-byte comparison key in flash memory. Refer to Table 4-3 and Table 4-4 for the absolute address assignments for all flash registers. This section refers to registers and control bits only by their names. A Freescale-provided equate or header file normally is used to translate these names into the appropriate absolute addresses.

4.6.1 Flash Clock Divider Register (FCDIV)

Bit 7 of this register is a read-only status flag. Bits 6 through 0 may be read at any time but can be written only one time. Before any erase or programming operations are possible, write to this register to set the frequency of the clock for the nonvolatile memory system within acceptable limits.

	7	6	5	4	3	2	1	0
R	DIVLD	PRDIV8	DIV5	DIV4	DIV3	DIV2	DIV1	DIV0
W								
Reset	0	0	0	0	0	0	0	0

= Unimplemented or Reserved

Figure 4-4. Flash Clock Divider Register (FCDIV)

Table 4-6. FCDIV Field Descriptions

Field	Description
7 DIVLD	**Divisor Loaded Status Flag** — When set, this read-only status flag indicates that the FCDIV register has been written since reset. Reset clears this bit and the first write to this register causes this bit to become set regardless of the data written. 0 FCDIV has not been written since reset; erase and program operations disabled for flash. 1 FCDIV has been written since reset; erase and program operations enabled for flash.
6 PRDIV8	**Prescale (Divide) Flash Clock by 8** 0 Clock input to the flash clock divider is the bus rate clock. 1 Clock input to the flash clock divider is the bus rate clock divided by 8.
5 DIV[5:0]	**Divisor for Flash Clock Divider** — The flash clock divider divides the bus rate clock (or the bus rate clock divided by 8 if PRDIV8 = 1) by the value in the 6-bit DIV5:DIV0 field plus one. The resulting frequency of the internal flash clock must fall within the range of 200 kHz to 150 kHz for proper flash operations. Program/erase timing pulses are one cycle of this internal flash clock, which corresponds to a range of 5 μs to 6.7 μs. The automated programming logic uses an integer number of these pulses to complete an erase or program operation. See Equation 4-1 and Equation 4-2. Table 4-7 shows the appropriate values for PRDIV8 and DIV5:DIV0 for selected bus frequencies.

$$\text{if PRDIV8} = 0 \text{ — } f_{FCLK} = f_{Bus} \div ([DIV5:DIV0] + 1) \qquad \textit{Eqn. 4-1}$$

$$\text{if PRDIV8} = 1 \text{ — } f_{FCLK} = f_{Bus} \div (8 \times ([DIV5:DIV0] + 1)) \qquad \textit{Eqn. 4-2}$$

Table 4-7. Flash Clock Divider Settings

f_{Bus}	PRDIV8 (Binary)	DIV5:DIV0 (Decimal)	f_{FCLK}	Program/Erase Timing Pulse (5 μs Min, 6.7 μs Max)
20 MHz	1	12	192.3 kHz	5.2 μs
10 MHz	0	49	200 kHz	5 μs
8 MHz	0	39	200 kHz	5 μs
4 MHz	0	19	200 kHz	5 μs
2 MHz	0	9	200 kHz	5 μs
1 MHz	0	4	200 kHz	5 μs
200 kHz	0	0	200 kHz	5 μs
150 kHz	0	0	150 kHz	6.7 μs

4.6.2 Flash Options Register (FOPT and NVOPT)

During reset, the contents of the nonvolatile location NVOPT are copied from flash into FOPT. Bits 5 through 2 are not used and always read 0. This register may be read at any time, but writes have no meaning or effect. To change the value in this register, erase and reprogram the NVOPT location in flash memory as usual and then issue a new MCU reset.

	7	6	5	4	3	2	1	0
R	KEYEN	FNORED	0	0	0	0	SEC01	SEC00
W								
Reset	This register is loaded from nonvolatile location NVOPT during reset.							

= Unimplemented or Reserved

Figure 4-5. Flash Options Register (FOPT)

Table 4-8. FOPT Field Descriptions

Field	Description
7 KEYEN	**Backdoor Key Mechanism Enable** — When this bit is 0, the backdoor key mechanism cannot be used to disengage security. The backdoor key mechanism is accessible only from user (secured) firmware. BDM commands cannot be used to write key comparison values that would unlock the backdoor key. For more detailed information about the backdoor key mechanism, refer to Section 4.5, "Security." 0 No backdoor key access allowed. 1 If user firmware writes an 8-byte value that matches the nonvolatile backdoor key (NVBACKKEY through NVBACKKEY+7, in that order), security is temporarily disengaged until the next MCU reset.
6 FNORED	**Vector Redirection Disable** — When this bit is 1, vector redirection is disabled. 0 Vector redirection enabled. 1 Vector redirection disabled.
1:0 SEC0[1:0]	**Security State Code** — This 2-bit field determines the security state of the MCU as shown below. When the MCU is secure, the contents of RAM and flash memory cannot be accessed by instructions from any unsecured source including the background debug interface. For more detailed information about security, refer to Section 4.5, "Security." 00 Secure 01 Secure 10 Unsecured 11 Secure SEC0[1:0] changes to 10 after successful backdoor key entry or a successful blank check of flash.

4.6.3 Flash Configuration Register (FCNFG)

Bits 7 through 5 may be read or written at any time. Bits 4 through 0 always read 0 and cannot be written.

	7	6	5	4	3	2	1	0
R	0	0	KEYACC	0	0	0	0	0
W								
Reset	0	0	0	0	0	0	0	0

= Unimplemented or Reserved

Figure 4-6. Flash Configuration Register (FCNFG)

Table 4-9. FCNFG Field Descriptions

Field	Description
5 KEYACC	**Enable Writing of Access Key** — This bit enables writing of the backdoor comparison key. For more detailed information about the backdoor key mechanism, refer to Section 4.5, "Security." 0 Writes to 0xFFB0–0xFFB7 are interpreted as the start of a flash programming or erase command. 1 Writes to NVBACKKEY (0xFFB0–0xFFB7) are interpreted as comparison key writes. Reads of the flash return invalid data.

4.6.4 Flash Protection Register (FPROT and NVPROT)

During reset, the contents of the nonvolatile location NVPROT is copied from flash into FPROT. Bits 0, 1, and 2 are not used and each always reads as 0. This register may be read at any time, but user program writes have no meaning or effect. Background debug commands can write to FPROT.

	7	6	5	4	3	2	1	0
R	FPOPEN	FPDIS	FPS2	FPS1	FPS0	0	0	0
W	(1)	(1)	(1)	(1)	(1)			
Reset	This register is loaded from nonvolatile location NVPROT during reset.							

= Unimplemented or Reserved

Figure 4-7. Flash Protection Register (FPROT)

[1] Background commands can be used to change the contents of these bits in FPROT.

Table 4-10. FPROT Field Descriptions

Field	Description
7 FPOPEN	**Open Unprotected Flash for Program/Erase** 0 Entire flash memory is block protected (no program or erase allowed). 1 Any flash location, not otherwise block protected or secured, may be erased or programmed.

Table 4-10. FPROT Field Descriptions (continued)

Field	Description
6 FPDIS	**Flash Protection Disable** 0 Flash block specified by FPS2:FPS0 is block protected (program and erase not allowed). 1 No flash block is protected.
5:3 FPS[2:0]	**Flash Protect Size Selects** — When FPDIS = 0, this 3-bit field determines the size of a protected block of flash locations at the high address end of the flash (see Table 4-11). Protected flash locations cannot be erased or programmed.

Table 4-11. High Address Protected Block

FPS2:FPS1:FPS0	Protected Address Range	Protected Block Size	Redirected Vectors[1,2]
0:0:0	0xFE00–0xFFFF	512 bytes	0xFDC0–0xFDFD
0:0:1	0xFC00–0xFFFF	1024 bytes	0xFBC0–0xFBFD
0:1:0	0xF800–0xFFFF	2048 bytes	0xF7C0–0xF7FD
0:1:1	0xF000–0xFFFF	4096 bytes	0xEFC0–0xEFFD
1:0:0	0xE000–0xFFFF	8192 bytes	0xDFC0–0xDFFD
1:0:1	0xC000–0xFFFF	16384 bytes	0xBFC0–0xBFFD[3]
1:1:0	0x8000–0xFFFF	32768 bytes	0x7FC0–0x7FFD[4]
1:1:1	0x182C–0xFFFF	59,348 bytes	No redirection allowed

1 No redirection if FPOPEN = 0, or FNORED = 1.

2 Reset vector is not redirected.

3 32K and 60K devices only.

4 60K devices only.

4.6.5 Flash Status Register (FSTAT)

Bits 3, 1, and 0 always read 0 and writes have no meaning or effect. The remaining five bits are status bits that can be read at any time. Writes to these bits have special meanings that are discussed in the bit descriptions.

	7	6	5	4	3	2	1	0
R	FCBEF	FCCF	FPVIOL	FACCERR	0	FBLANK	0	0
W								
Reset	1	1	0	0	0	0	0	0

= Unimplemented or Reserved

Figure 4-8. Flash Status Register (FSTAT)

Table 4-12. FSTAT Field Descriptions

Field	Description
7 FCBEF	**Flash Command Buffer Empty Flag** — The FCBEF bit is used to launch commands. It also indicates that the command buffer is empty so that a new command sequence can be executed when performing burst programming. The FCBEF bit is cleared by writing a 1 to it or when a burst program command is transferred to the array for programming. Only burst program commands can be buffered. 0 Command buffer is full (not ready for additional commands). 1 A new burst program command may be written to the command buffer.
6 FCCF	**Flash Command Complete Flag** — FCCF is set automatically when the command buffer is empty and no command is being processed. FCCF is cleared automatically when a new command is started (by writing 1 to FCBEF to register a command). Writing to FCCF has no meaning or effect. 0 Command in progress 1 All commands complete
5 FPVIOL	**Protection Violation Flag** — FPVIOL is set automatically when FCBEF is cleared to register a command that attempts to erase or program a location in a protected block (the erroneous command is ignored). FPVIOL is cleared by writing a 1 to FPVIOL. 0 No protection violation. 1 An attempt was made to erase or program a protected location.
4 FACCERR	**Access Error Flag** — FACCERR is set automatically when the proper command sequence is not followed exactly (the erroneous command is ignored), if a program or erase operation is attempted before the FCDIV register has been initialized, or if the MCU enters stop while a command was in progress. For a more detailed discussion of the exact actions that are considered access errors, see Section 4.4.5, “Access Errors.” FACCERR is cleared by writing a 1 to FACCERR. Writing a 0 to FACCERR has no meaning or effect. 0 No access error has occurred. 1 An access error has occurred.
2 FBLANK	**Flash Verified as All Blank (Erased) Flag** — FBLANK is set automatically at the conclusion of a blank check command if the entire flash array was verified to be erased. FBLANK is cleared by clearing FCBEF to write a new valid command. Writing to FBLANK has no meaning or effect. 0 After a blank check command is completed and FCCF = 1, FBLANK = 0 indicates the flash array is not completely erased. 1 After a blank check command is completed and FCCF = 1, FBLANK = 1 indicates the flash array is completely erased (all 0xFF).

4.6.6 Flash Command Register (FCMD)

Only five command codes are recognized in normal user modes as shown in Table 4-14. Refer to Section 4.4.3, “Program and Erase Command Execution” for a detailed discussion of flash programming and erase operations.

	7	6	5	4	3	2	1	0
R	0	0	0	0	0	0	0	0
W	FCMD7	FCMD6	FCMD5	FCMD4	FCMD3	FCMD2	FCMD1	FCMD0
Reset	0	0	0	0	0	0	0	0

Figure 4-9. Flash Command Register (FCMD)

Table 4-13. FCMD Field Descriptions

Field	Description
7:0 FCMD[7:0]	See Table 4-14 for a description of FCMD[7:0].

Table 4-14. Flash Commands

Command	FCMD	Equate File Label
Blank check	0x05	mBlank
Byte program	0x20	mByteProg
Byte program — burst mode	0x25	mBurstProg
Page erase (512 bytes/page)	0x40	mPageErase
Mass erase (all flash)	0x41	mMassErase

All other command codes are illegal and generate an access error.

It is not necessary to perform a blank check command after a mass erase operation. Only blank check is required as part of the security unlocking mechanism.

Chapter 5
Resets, Interrupts, and System Configuration

5.1 Introduction

This section discusses basic reset and interrupt mechanisms and the various sources of reset and interrupts in the MC9S08GBxxA/GTxxA. Some interrupt sources from peripheral modules are discussed in greater detail within other sections of this data manual. This section gathers basic information about all reset and interrupt sources in one place for easy reference. A few reset and interrupt sources, including the computer operating properly (COP) watchdog and real-time interrupt (RTI), are not part of on-chip peripheral systems with their own sections but are part of the system control logic.

5.2 Features

Reset and interrupt features include:

- Multiple sources of reset for flexible system configuration and reliable operation:
  - Power-on detection (POR)
  - Low voltage detection (LVD) with enable
  - External $\overline{\text{RESET}}$ pin with enable
  - COP watchdog with enable and two timeout choices
  - Illegal opcode
  - Serial command from a background debug host
- Reset status register (SRS) to indicate source of most recent reset
- Separate interrupt vectors for each module (reduces polling overhead) (see Table 5-1)

5.3 MCU Reset

Resetting the MCU provides a way to start processing from a known set of initial conditions. During reset, most control and status registers are forced to initial values and the program counter is loaded from the reset vector (0xFFFE:0xFFFF). On-chip peripheral modules are disabled and I/O pins are initially configured as general-purpose high-impedance inputs with pullup devices disabled. The I bit in the condition code register (CCR) is set to block maskable interrupts so the user program has a chance to initialize the stack pointer (SP) and system control settings. SP is forced to 0x00FF at reset.

The MC9S08GBxxA/GTxxA has seven sources for reset:

- Power-on reset (POR)
- Low-voltage detect (LVD)
- Computer operating properly (COP) timer

- Illegal opcode detect
- Background debug forced reset
- The reset pin ($\overline{\text{RESET}}$)
- Clock generator loss of lock and loss of clock reset

Each of these sources, with the exception of the background debug forced reset, has an associated bit in the system reset status register. Whenever the MCU enters reset, the internal clock generator (ICG) module switches to self-clocked mode with the frequency of f_{Self_reset} selected. The reset pin is driven low for 34 internal bus cycles where the internal bus frequency is half the ICG frequency. After the 34 cycles are completed, the pin is released and will be pulled up by the internal pullup resistor, unless it is held low externally. After the pin is released, it is sampled after another 38 cycles to determine whether the reset pin is the cause of the MCU reset.

5.4 Computer Operating Properly (COP) Watchdog

The COP watchdog is intended to force a system reset when the application software fails to execute as expected. To prevent a system reset from the COP timer (when it is enabled), application software must reset the COP timer periodically. If the application program gets lost and fails to reset the COP before it times out, a system reset is generated to force the system back to a known starting point. The COP watchdog is enabled by the COPE bit in SOPT (see Section 5.8.4, “System Options Register (SOPT)” for additional information). The COP timer is reset by writing any value to the address of SRS. This write does not affect the data in the read-only SRS. Instead, the act of writing to this address is decoded and sends a reset signal to the COP timer.

After any reset, the COP timer is enabled. This provides a reliable way to detect code that is not executing as intended. If the COP watchdog is not used in an application, it can be disabled by clearing the COPE bit in the write-once SOPT register. Also, the COPT bit can be used to choose one of two timeout periods (2^{18} or 2^{13} cycles of the bus rate clock). Even if the application will use the reset default settings in COPE and COPT, the user should still write to write-once SOPT during reset initialization to lock in the settings. That way, they cannot be changed accidentally if the application program gets lost.

The write to SRS that services (clears) the COP timer should not be placed in an interrupt service routine (ISR) because the ISR could continue to be executed periodically even if the main application program fails.

When the MCU is in active background mode, the COP timer is temporarily disabled.

5.5 Interrupts

Interrupts provide a way to save the current CPU status and registers, execute an interrupt service routine (ISR), and then restore the CPU status so processing resumes where it left off before the interrupt. Other than the software interrupt (SWI), which is a program instruction, interrupts are caused by hardware events such as an edge on the IRQ pin or a timer-overflow event. The debug module can also generate an SWI under certain circumstances.

If an event occurs in an enabled interrupt source, an associated read-only status flag will become set. The CPU will not respond until and unless the local interrupt enable is set to 1 to enable the interrupt. The I bit

in the CCR is 0 to allow interrupts. The global interrupt mask (I bit) in the CCR is initially set after reset which masks (prevents) all maskable interrupt sources. The user program initializes the stack pointer and performs other system setup before clearing the I bit to allow the CPU to respond to interrupts.

When the CPU receives a qualified interrupt request, it completes the current instruction before responding to the interrupt. The interrupt sequence follows the same cycle-by-cycle sequence as the SWI instruction and consists of:

- Saving the CPU registers on the stack
- Setting the I bit in the CCR to mask further interrupts
- Fetching the interrupt vector for the highest-priority interrupt that is currently pending
- Filling the instruction queue with the first three bytes of program information starting from the address fetched from the interrupt vector locations

While the CPU is responding to the interrupt, the I bit is automatically set to avoid the possibility of another interrupt interrupting the ISR itself (this is called nesting of interrupts). Normally, the I bit is restored to 0 when the CCR is restored from the value stacked on entry to the ISR. In rare cases, the I bit may be cleared inside an ISR (after clearing the status flag that generated the interrupt) so that other interrupts can be serviced without waiting for the first service routine to finish. This practice is not recommended for anyone other than the most experienced programmers because it can lead to subtle program errors that are difficult to debug.

The interrupt service routine ends with a return-from-interrupt (RTI) instruction which restores the CCR, A, X, and PC registers to their pre-interrupt values by reading the previously saved information off the stack.

NOTE

For compatibility with the M68HC08, the H register is not automatically saved and restored. It is good programming practice to push H onto the stack at the start of the interrupt service routine (ISR) and restore it just before the RTI that is used to return from the ISR.

When two or more interrupts are pending when the I bit is cleared, the highest priority source is serviced first (see Table 5-1).

5.5.1 Interrupt Stack Frame

Figure 5-1 shows the contents and organization of a stack frame. Before the interrupt, the stack pointer (SP) points at the next available byte location on the stack. The current values of CPU registers are stored on the stack starting with the low-order byte of the program counter (PCL) and ending with the CCR. After stacking, the SP points at the next available location on the stack which is the address that is one less than the address where the CCR was saved. The PC value that is stacked is the address of the instruction in the main program that would have executed next if the interrupt had not occurred.

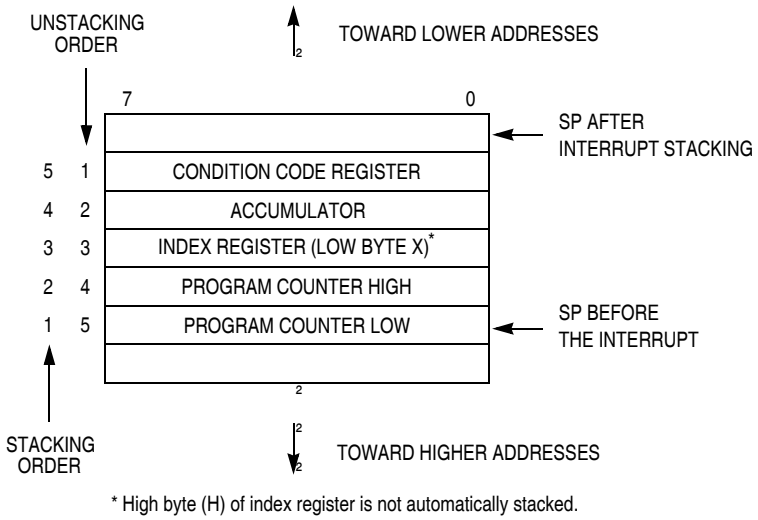

Figure 5-1. Interrupt Stack Frame

When an RTI instruction is executed, these values are recovered from the stack in reverse order. As part of the RTI sequence, the CPU fills the instruction pipeline by reading three bytes of program information, starting from the PC address just recovered from the stack.

The status flag causing the interrupt must be acknowledged (cleared) before returning from the ISR. Typically, the flag should be cleared at the beginning of the ISR so that if another interrupt is generated by this same source, it will be registered so it can be serviced after completion of the current ISR.

5.5.2 External Interrupt Request (IRQ) Pin

External interrupts are managed by the IRQSC status and control register. When the IRQ function is enabled, synchronous logic monitors the pin for edge-only or edge-and-level events. When the MCU is in stop mode and system clocks are shut down, a separate asynchronous path is used so the IRQ (if enabled) can wake the MCU.

5.5.2.1 Pin Configuration Options

The IRQ pin enable (IRQPE) control bit in the IRQSC register must be 1 for the IRQ pin to act as the interrupt request (IRQ) input. When the pin is configured as an IRQ input, the user can choose the polarity of edges or levels detected (IRQEDG), whether the pin detects edges-only or edges and levels (IRQMOD), and whether an event causes an interrupt or only sets the IRQF flag (which can be polled by software).

When the IRQ pin is configured to detect rising edges, an optional pulldown resistor is available rather than a pullup resistor. BIH and BIL instructions may be used to detect the level on the IRQ pin when the pin is configured to act as the IRQ input.

NOTE

The voltage measured on the pulled up IRQ pin may be as low as $V_{DD} - 0.7$ V. The internal gates connected to this pin are pulled all the way to V_{DD}. All other pins with enabled pullup resistors will have an unloaded measurement of V_{DD}.

5.5.2.2 Edge and Level Sensitivity

The IRQMOD control bit re-configures the detection logic so it detects edge events and pin levels. In this edge detection mode, the IRQF status flag becomes set when an edge is detected (when the IRQ pin changes from the deasserted to the asserted level), but the flag is continuously set (and cannot be cleared) as long as the IRQ pin remains at the asserted level.

5.5.3 Interrupt Vectors, Sources, and Local Masks

Table 5-1 provides a summary of all interrupt sources. Higher-priority sources are located toward the bottom of the table. The high-order byte of the address for the interrupt service routine is located at the first address in the vector address column, and the low-order byte of the address for the interrupt service routine is located at the next higher address.

When an interrupt condition occurs, an associated flag bit becomes set. If the associated local interrupt enable is 1, an interrupt request is sent to the CPU. Within the CPU, if the global interrupt mask (I bit in the CCR) is 0, the CPU will finish the current instruction, stack the PCL, PCH, X, A, and CCR CPU registers, set the I bit, and then fetch the interrupt vector for the highest priority pending interrupt. Processing then continues in the interrupt service routine.

Table 5-1. Vector Summary

Vector Priority	Vector Number	Address (High/Low)	Vector Name	Module	Source	Enable	Description
Lower	26 through 31	0xFFC0/FFC1 through 0xFFCA/FFCB	Unused Vector Space (available for user program)				
	25	0xFFCC/FFCD	Vrti	System control	RTIF	RTIE	Real-time interrupt
	24	0xFFCE/FFCF	Viic1	IIC	IICIS	IICIE	IIC control
	23	0xFFD0/FFD1	Vatd1	ATD	COCO	AIEN	AD conversion complete
	22	0xFFD2/FFD3	Vkeyboard1	KBI	KBF	KBIE	Keyboard pins
	21	0xFFD4/FFD5	Vsci2tx	SCI2	TDRE TC	TIE TCIE	SCI2 transmit
	20	0xFFD6/FFD7	Vsci2rx	SCI2	IDLE RDRF	ILIE RIE	SCI2 receive
	19	0xFFD8/FFD9	Vsci2err	SCI2	OR NF FE PF	ORIE NFIE FEIE PFIE	SCI2 error
	18	0xFFDA/FFDB	Vsci1tx	SCI1	TDRE TC	TIE TCIE	SCI1 transmit
	17	0xFFDC/FFDD	Vsci1rx	SCI1	IDLE RDRF	ILIE RIE	SCI1 receive
	16	0xFFDE/FFDF	Vsci1err	SCI1	OR NF FE PF	ORIE NFIE FEIE PFIE	SCI1 error
	15	0xFFE0/FFE1	Vspi1	SPI	SPIF MODF SPTEF	SPIE SPIE SPTIE	SPI
	14	0xFFE2/FFE3	Vtpm2ovf	TPM2	TOF	TOIE	TPM2 overflow
	13	0xFFE4/FFE5	Vtpm2ch4	TPM2	CH4F	CH4IE	TPM2 channel 4
	12	0xFFE6/FFE7	Vtpm2ch3	TPM2	CH3F	CH3IE	TPM2 channel 3
	11	0xFFE8/FFE9	Vtpm2ch2	TPM2	CH2F	CH2IE	TPM2 channel 2
	10	0xFFEA/FFEB	Vtpm2ch1	TPM2	CH1F	CH1IE	TPM2 channel 1
	9	0xFFEC/FFED	Vtpm2ch0	TPM2	CH0F	CH0IE	TPM2 channel 0
	8	0xFFEE/FFEF	Vtpm1ovf	TPM1	TOF	TOIE	TPM1 overflow
	7	0xFFF0/FFF1	Vtpm1ch2	TPM1	CH2F	CH2IE	TPM1 channel 2
	6	0xFFF2/FFF3	Vtpm1ch1	TPM1	CH1F	CH1IE	TPM1 channel 1
	5	0xFFF4/FFF5	Vtpm1ch0	TPM1	CH0F	CH0IE	TPM1 channel 0
	4	0xFFF6/FFF7	Vicg	ICG	ICGIF (LOLS/LOCS)	LOLRE/LOCRE	ICG
	3	0xFFF8/FFF9	Vlvd	System control	LVDF	LVDIE	Low-voltage detect
	2	0xFFFA/FFFB	Virq	IRQ	IRQF	IRQIE	IRQ pin
	1	0xFFFC/FFFD	Vswi	Core	SWI Instruction	—	Software interrupt
Higher	0	0xFFFE/FFFF	Vreset	System control	COP LVD $\overline{\text{RESET}}$ pin Illegal opcode	COPE LVDRE — —	Watchdog timer Low-voltage detect External pin Illegal opcode

5.6 Low-Voltage Detect (LVD) System

The MC9S08GBxxA/GTxxA includes a system to protect against low voltage conditions to protect memory contents and control MCU system states during supply voltage variations. The system comprises a power-on reset (POR) circuit and an LVD circuit with a user selectable trip voltage, either high (V_{LVDH}) or low (V_{LVDL}). The LVD circuit is enabled when LVDE in SPMSC1 is high and the trip voltage is selected by LVDV in SPMSC2. The LVD is disabled upon entering any of the stop modes unless the LVDSE bit is set. If LVDSE and LVDE are both set, then the MCU cannot enter stop1 or stop2, and the current consumption in stop3 with the LVD enabled will be greater.

5.6.1 Power-On Reset Operation

When power is initially applied to the MCU, or when the supply voltage drops below the V_{POR} level, the POR circuit will cause a reset condition. As the supply voltage rises, the LVD circuit will hold the chip in reset until the supply has risen above the V_{LVDL} level. Both the POR bit and the LVD bit in SRS are set following a POR.

5.6.2 LVD Reset Operation

The LVD can be configured to generate a reset upon detection of a low voltage condition by setting LVDRE to 1. After an LVD reset has occurred, the LVD system will hold the MCU in reset until the supply voltage has risen above the level determined by LVDV. The LVD bit in the SRS register is set following either an LVD reset or POR.

5.6.3 LVD Interrupt Operation

When a low voltage condition is detected and the LVD circuit is configured for interrupt operation (LVDE set, LVDIE set, and LVDRE clear), then LVDF will be set and an LVD interrupt will occur.

5.6.4 Low-Voltage Warning (LVW)

The LVD system has a low voltage warning flag to indicate to the user that the supply voltage is approaching, but is still above, the LVD voltage. The LVW does not have an interrupt associated with it. There are two user selectable trip voltages for the LVW, one high (V_{LVWH}) and one low (V_{LVWL}). The trip voltage is selected by LVWV in SPMSC2.

5.7 Real-Time Interrupt (RTI)

The real-time interrupt function can be used to generate periodic interrupts based on a multiple of the source clock's period. The RTI has two source clock choices, the external clock input (ICGERCLK) to the ICG or the RTI's own internal clock. The RTI can be used in run, wait, stop2 and stop3 modes. It is not available in stop1 mode.

In run and wait modes, only the external clock can be used as the RTI's clock source. In stop2 mode, only the internal RTI clock can be used. In stop3, either the external clock or internal RTI clock can be used. When using the external oscillator in stop3 mode, it must be enabled in stop (OSCSTEN = 1) and

configured for low bandwidth operation (RANGE = 0). If active BDM mode is enabled in stop3, the internal RTI clock is not available.

The SRTISC register includes a read-only status flag, a write-only acknowledge bit, and a 3-bit control value (RTIS2:RTIS1:RTIS0) used to select one of seven RTI periods. The RTI has a local interrupt enable, RTIE, to allow masking of the real-time interrupt. The module can be disabled by writing 0:0:0 to RTIS2:RTIS1:RTIS0 in which case the clock source input is disabled and no interrupts will be generated. See Section 5.8.6, "System Real-Time Interrupt Status and Control Register (SRTISC)," for detailed information about this register.

5.8 Reset, Interrupt, and System Control Registers and Control Bits

One 8-bit register in the direct page register space and eight 8-bit registers in the high-page register space are related to reset and interrupt systems.

Refer to the direct-page register summary in Chapter 4, "Memory" of this data sheet for the absolute address assignments for all registers. This section refers to registers and control bits only by their names. A Freescale-provided equate or header file is used to translate these names into the appropriate absolute addresses.

Some control bits in the SOPT and SPMSC2 registers are related to modes of operation. Although brief descriptions of these bits are provided here, the related functions are discussed in greater detail in Chapter 3, "Modes of Operation."

5.8.1 Interrupt Pin Request Status and Control Register (IRQSC)

This direct page register includes two unimplemented bits which always read 0, four read/write bits, one read-only status bit, and one write-only bit. These bits are used to configure the IRQ function, report status, and acknowledge IRQ events.

	7	6	5	4	3	2	1	0
R	0	0	IRQEDG	IRQPE	IRQF	0	IRQIE	IRQMOD
W						IRQACK		
Reset	0	0	0	0	0	0	0	0

= Unimplemented or Reserved

Figure 5-2. Interrupt Request Status and Control Register (IRQSC)

Table 5-2. IRQSC Field Descriptions

Field	Description
5 IRQEDG	**Interrupt Request (IRQ) Edge Select** — This read/write control bit is used to select the polarity of edges or levels on the IRQ pin that cause IRQF to be set. The IRQMOD control bit determines whether the IRQ pin is sensitive to both edges and levels or only edges. When the IRQ pin is enabled as the IRQ input and is configured to detect rising edges, the optional pullup resistor is re-configured as an optional pulldown resistor. 0 IRQ is falling edge or falling edge/low-level sensitive. 1 IRQ is rising edge or rising edge/high-level sensitive.
4 IRQPE	**IRQ Pin Enable** — This read/write control bit enables the IRQ pin function. When this bit is set, the IRQ pin can be used as an interrupt request. Also, when this bit is set, either an internal pull-up or an internal pull-down resistor is enabled depending on the state of the IRQMOD bit. 0 IRQ pin function is disabled. 1 IRQ pin function is enabled.
3 IRQF	**IRQ Flag —** This read-only status bit indicates when an interrupt request event has occurred. 0 No IRQ request. 1 IRQ event detected.
2 IRQACK	**IRQ Acknowledge** — This write-only bit is used to acknowledge interrupt request events (write 1 to clear IRQF). Writing 0 has no meaning or effect. Reads always return 0. If edge-and-level detection is selected (IRQMOD = 1), IRQF cannot be cleared while the IRQ pin remains at its asserted level.
1 IRQIE	**IRQ Interrupt Enable** — This read/write control bit determines whether IRQ events generate a hardware interrupt request. 0 Hardware interrupt requests from IRQF disabled (use polling). 1 Hardware interrupt requested whenever IRQF = 1.
0 IRQMOD	**IRQ Detection Mode** — This read/write control bit selects either edge-only detection or edge-and-level detection. The IRQEDG control bit determines the polarity of edges and levels that are detected as interrupt request events. See Section 5.5.2.2, “Edge and Level Sensitivity” for more details. 0 IRQ event on falling edges or rising edges only. 1 IRQ event on falling edges and low levels or on rising edges and high levels.

5.8.2 System Reset Status Register (SRS)

This register includes six read-only status flags to indicate the source of the most recent reset. When a debug host forces reset by writing 1 to BDFR in the SBDFR register, none of the status bits in SRS will be set. Writing any value to this register address clears the COP watchdog timer without affecting the contents of this register. The reset state of these bits depends on what caused the MCU to reset.

	7	6	5	4	3	2	1	0
R	POR	PIN	COP	ILOP	0	ICG	LVD	0
W	Writing any value to SIMRS address clears COP watchdog timer.							
Power-on reset:	1	0	0	0	0	0	1	0
Low-voltage reset:	U	0	0	0	0	0	1	0
Any other reset:	0	Note[1]	Note[1]	Note[1]	0	Note[1]	0	0

U = Unaffected by reset

1 Any of these reset sources that are active at the time of reset will cause the corresponding bit(s) to be set; bits corresponding to sources that are not active at the time of reset will be cleared.

Figure 5-3. System Reset Status (SRS)

Table 5-3. SRS Field Descriptions

Field	Description
7 POR	**Power-On Reset** — Reset was caused by the power-on detection logic. Because the internal supply voltage was ramping up at the time, the low-voltage reset (LVD) status bit is also set to indicate that the reset occurred while the internal supply was below the LVD threshold. 0 Reset not caused by POR. 1 POR caused reset.
6 PIN	**External Reset Pin** — Reset was caused by an active-low level on the external reset pin. 0 Reset not caused by external reset pin. 1 Reset came from external reset pin.
5 COP	**Computer Operating Properly (COP) Watchdog** — Reset was caused by the COP watchdog timer timing out. This reset source may be blocked by COPE = 0. 0 Reset not caused by COP timeout. 1 Reset caused by COP timeout.
4 ILOP	**Illegal Opcode** — Reset was caused by an attempt to execute an unimplemented or illegal opcode. The STOP instruction is considered illegal if stop is disabled by STOPE = 0 in the SOPT register. The BGND instruction is considered illegal if active background mode is disabled by ENBDM = 0 in the BDCSC register. 0 Reset not caused by an illegal opcode. 1 Reset caused by an illegal opcode.

Table 5-3. SRS Field Descriptions (continued)

Field	Description
2 ICG	**Internal Clock Generation Module Reset** — Reset was caused by an ICG module reset. 0 Reset not caused by ICG module. 1 Reset caused by ICG module.
1 LVD	**Low Voltage Detect** — If the LVD reset is enabled (LVDE = LVDRE = 1) and the supply drops below the LVD trip voltage, an LVD reset occurs. The LVD function is disabled when the MCU enters stop. To maintain LVD operation in stop, the LVDSE bit must be set. 0 Reset not caused by LVD trip or POR. 1 Reset caused by LVD trip or POR.

5.8.3 System Background Debug Force Reset Register (SBDFR)

This register contains a single write-only control bit. A serial background command such as WRITE_BYTE must be used to write to SBDFR. Attempts to write this register from a user program are ignored. Reads always return 0x00.

	7	6	5	4	3	2	1	0
R	0	0	0	0	0	0	0	0
W								BDFR[1]
Reset	0	0	0	0	0	0	0	0

= Unimplemented or Reserved

[1] BDFR is writable only through serial background debug commands, not from user programs.

Figure 5-4. System Background Debug Force Reset Register (SBDFR)

Table 5-4. SBDFR Field Descriptions

Field	Description
0 BDFR	**Background Debug Force Reset** — A serial background mode command such as WRITE_BYTE allows an external debug host to force a target system reset. Writing 1 to this bit forces an MCU reset. This bit cannot be written from a user program.

5.8.4 System Options Register (SOPT)

This register may be read at any time. Bits 3 and 2 are unimplemented and always read 0. This is a write-once register so only the first write after reset is honored. Any subsequent attempt to write to SOPT (intentionally or unintentionally) is ignored to avoid accidental changes to these sensitive settings. SOPT should be written during the user's reset initialization program to set the desired controls even if the desired settings are the same as the reset settings.

	7	6	5	4	3	2	1	0
R	COPE	COPT	STOPE		0	0	BKGDPE	
W								
Reset	1	1	0	1	0	0	1	1

= Unimplemented or Reserved

Figure 5-5. System Options Register (SOPT)

Table 5-5. SOPT Field Descriptions

Field	Description
7 COPE	**COP Watchdog Enable** — This write-once bit defaults to 1 after reset. 0 COP watchdog timer disabled. 1 COP watchdog timer enabled (force reset on timeout).
6 COPT	**COP Watchdog Timeout** — This write-once bit defaults to 1 after reset. 0 Short timeout period selected (2^{13} cycles of BUSCLK). 1 Long timeout period selected (2^{18} cycles of BUSCLK).
5 STOPE	**Stop Mode Enable** — This write-once bit defaults to 0 after reset, which disables stop mode. If stop mode is disabled and a user program attempts to execute a STOP instruction, an illegal opcode reset is forced. 0 Stop mode disabled. 1 Stop mode enabled.
1 BKGDPE	**Background Debug Mode Pin Enable** — The BKGDPE bit enables the PTG0/BKGD/MS pin to function as BKGD/MS. When the bit is clear, the pin will function as PTG0, which is an output-only general-purpose I/O. This pin always defaults to BKGD/MS function after any reset. 0 BKGD pin disabled. 1 BKGD pin enabled.

5.8.5 System Device Identification Register (SDIDH, SDIDL)

This read-only register is included so host development systems can identify the HCS08 derivative and revision number. This allows the development software to recognize where specific memory blocks, registers, and control bits are located in a target MCU.

	7	6	5	4	3	2	1	0
R	REV3	REV2	REV1	REV0	ID11	ID10	ID9	ID8
W								
Reset	0[1]	0(1)	0(1)	0(1)	0	0	0	0

= Unimplemented or Reserved

[1] The revision number that is hard coded into these bits reflects the current silicon revision level.

Figure 5-6. System Device Identification Register High (SDIDH)

Table 5-6. SDIDH Field Descriptions

Field	Description
7:4 REV[3:0]	**Revision Number** — The high-order 4 bits of address 0x1806 are hard coded to reflect the current mask set revision number (0–F).
3:0 ID[11:8]	**Part Identification Number** — Each derivative in the HCS08 Family has a unique identification number. The MC9S08GBxxA/GTxxA is hard coded to the value 0x002. See also ID bits in Table 5-7.

	7	6	5	4	3	2	1	0
R	ID7	ID6	ID5	ID4	ID3	ID2	ID1	ID0
W								
Reset	0	0	0	0	0	0	1	0

= Unimplemented or Reserved

Figure 5-7. System Device Identification Register Low (SDIDL)

Table 5-7. SDIDL Field Descriptions

Field	Description
3:0 ID[7:0]	**Part Identification Number** — Each derivative in the HCS08 Family has a unique identification number. The MC9S08GBxxA/GTxxA is hard coded to the value 0x002. See also ID bits in Table 5-6.

5.8.6 System Real-Time Interrupt Status and Control Register (SRTISC)

This register contains one read-only status flag, one write-only acknowledge bit, three read/write delay selects, and three unimplemented bits, which always read 0.

	7	6	5	4	3	2	1	0
R	RTIF	0	RTICLKS	RTIE	0	RTIS2	RTIS1	RTIS0
W		RTIACK						
Reset	0	0	0	0	0	0	0	0

= Unimplemented or Reserved

Figure 5-8. System RTI Status and Control Register (SRTISC)

Table 5-8. SRTISC Field Descriptions

Field	Description
7 RTIF	**Real-Time Interrupt Flag** — This read-only status bit indicates the periodic wakeup timer has timed out. 0 Periodic wakeup timer not timed out. 1 Periodic wakeup timer timed out.
6 RTIACK	**Real-Time Interrupt Acknowledge** — This write-only bit is used to acknowledge real-time interrupt request (write 1 to clear RTIF). Writing 0 has no meaning or effect. Reads always return 0.
5 RTICLKS	**Real-Time Interrupt Clock Select** — This read/write bit selects the clock source for the real-time interrupt. 0 Real-time interrupt request clock source is internal oscillator. 1 Real-time interrupt request clock source is external clock.
4 RTIE	**Real-Time Interrupt Enable** — This read-write bit enables real-time interrupts. 0 Real-time interrupts disabled. 1 Real-time interrupts enabled.
2:0 RTIS[2:0]	**Real-Time Interrupt Period Selects** — These read/write bits select the wakeup period for the RTI. One clock source for the real-time interrupt is its own internal clock source, which oscillates with a period of approximately t_{RTI} and is independent of other MCU clock sources. Using an external clock source the delays will be crystal frequency divided by value in RTIS2:RTIS1:RTIS0. See Table 5-9.

Table 5-9. Real-Time Interrupt Period

RTIS2:RTIS1:RTIS0	Internal Clock Source [1] (t_{RTI} = 1 ms, Nominal)	External Clock Source [2] Period = t_{ext}
0:0:0	Disable periodic wakeup timer	Disable periodic wakeup timer
0:0:1	8 ms	t_{ext} x 256
0:1:0	32 ms	t_{ex} x 1024
0:1:1	64 ms	t_{ex} x 2048
1:0:0	128 ms	t_{ex} x 4096
1:0:1	256 ms	t_{ext} x 8192
1:1:0	512 ms	t_{ext} x 16384
1:1:1	1.024 s	t_{ex} x 32768

[1] See Table A-10t_{RTI} in Appendix A, “Electrical Characteristics,” for the tolerance on these values.

[2] t_{ext} is based on the external clock source, resonator, or crystal selected by the ICG configuration. See Table A-9 for details.

5.8.7 System Power Management Status and Control 1 Register (SPMSC1)

	7	6	5	4	3	2	1	0
R	LVDF	0	LVDIE	LVDRE[1]	LVDSE[(1)]	LVDE[(1)]	0	0
W		LVDACK						
Reset	0	0	0	1	1	1	0	0

= Unimplemented or Reserved

[1] This bit can be written only one time after reset. Additional writes are ignored.

Figure 5-9. System Power Management Status and Control 1 Register (SPMSC1)

Table 5-10. SPMSC1 Field Descriptions

Field	Description
7 LVDF	**Low-Voltage Detect Flag** — Provided LVDE = 1, this read-only status bit indicates a low-voltage detect event.
6 LVDACK	**Low-Voltage Detect Acknowledge** — This write-only bit is used to acknowledge low voltage detection errors (write 1 to clear LVDF). Reads always return 0.
5 LVDIE	**Low-Voltage Detect Interrupt Enable** — This read/write bit enables hardware interrupt requests for LVDF. 0 Hardware interrupt disabled (use polling). 1 Request a hardware interrupt when LVDF = 1.
4 LVDRE	**Low-Voltage Detect Reset Enable** — This read/write bit enables LVDF events to generate a hardware reset (provided LVDE = 1). 0 LVDF does not generate hardware resets. 1 Force an MCU reset when LVDF = 1.
3 LVDSE	**Low-Voltage Detect Stop Enable** — Provided LVDE = 1, this read/write bit determines whether the low-voltage detect function operates when the MCU is in stop mode. 0 Low-voltage detect disabled during stop mode. 1 Low-voltage detect enabled during stop mode.
2 LVDE	**Low-Voltage Detect Enable** — This read/write bit enables low-voltage detect logic and qualifies the operation of other bits in this register. 0 LVD logic disabled. 1 LVD logic enabled.

5.8.8 System Power Management Status and Control 2 Register (SPMSC2)

This register is used to report the status of the low voltage warning function, and to configure the stop mode behavior of the MCU.

	7	6	5	4	3	2	1	0
R	LVWF	0	LVDV	LVWV	PPDF	0	PDC	PPDC
W		LVWACK				PPDACK		
Power-on reset:	0[1]	0	0	0	0	0	0	0
LVD reset:	0[1]	0	U	U	0	0	0	0
Any other reset:	0[1]	0	U	U	0	0	0	0

= Unimplemented or Reserved U = Unaffected by reset

1 LVWF will be set in the case when V_{Supply} transitions below the trip point or after reset and V_{Supply} is already below V_{LVW}.

Figure 5-10. System Power Management Status and Control 2 Register (SPMSC2)

Table 5-11. SPMSC2 Field Descriptions

Field	Description
7 LVWF	**Low-Voltage Warning Flag** — The LVWF bit indicates the low voltage warning status. 0 Low voltage warning **not** present. 1 Low voltage warning is present or was present.
6 LVWACK	**Low-Voltage Warning Acknowledge** — The LVWACK bit is the low-voltage warning acknowledge. Writing a 1 to LVWACK clears LVWF to 0 if a low voltage warning is not present.
5 LVDV	**Low-Voltage Detect Voltage Select** — The LVDV bit selects the LVD trip point voltage (V_{LVD}). 0 Low trip point selected ($V_{LVD} = V_{LVDL}$). 1 High trip point selected ($V_{LVD} = V_{LVDH}$).
4 LVWV	**Low-Voltage Warning Voltage Select** — The LVWV bit selects the LVW trip point voltage (V_{LVW}). 0 Low trip point selected ($V_{LVW} = V_{LVWL}$). 1 High trip point selected ($V_{LVW} = V_{LVWH}$).
3 PPDF	**Partial Power Down Flag** — The PPDF bit indicates that the MCU has exited the stop2 mode. 0 Not stop2 mode recovery. 1 Stop2 mode recovery.
2 PPDACK	**Partial Power Down Acknowledge** — Writing a 1 to PPDACK clears the PPDF bit.
1 PDC	**Power Down Control** — The write-once PDC bit controls entry into the power down (stop2 and stop1) modes. 0 Power down modes are disabled. 1 Power down modes are enabled.
0 PPDC	**Partial Power Down Control** — The write-once PPDC bit controls which power down mode, stop1 or stop2, is selected. 0 Stop1, full power down, mode enabled if PDC set. 1 Stop2, partial power down, mode enabled if PDC set.

Chapter 6
Parallel Input/Output

6.1 Introduction

This section explains software controls related to parallel input/output (I/O). The MC9S08GBxxA has seven I/O ports which include a total of 56 general-purpose I/O pins (one of these pins is output only). The MC9S08GTxxA has six I/O ports which include a total of up to 39 general-purpose I/O pins (one pin, PTG0, is output only). See Chapter 2, "Pins and Connections," for more information about the logic and hardware aspects of these pins.

Many of these pins are shared with on-chip peripherals such as timer systems, external interrupts, or keyboard interrupts. When these other modules are not controlling the port pins, they revert to general-purpose I/O control. For each I/O pin, a port data bit provides access to input (read) and output (write) data, a data direction bit controls the direction of the pin, and a pullup enable bit enables an internal pullup device (provided the pin is configured as an input), and a slew rate control bit controls the rise and fall times of the pins.

NOTE

Not all general-purpose I/O pins are available on all packages. To avoid extra current drain from floating input pins, the user's reset initialization routine in the application program should either enable on-chip pullup devices or change the direction of unconnected pins to outputs so the pins do not float.

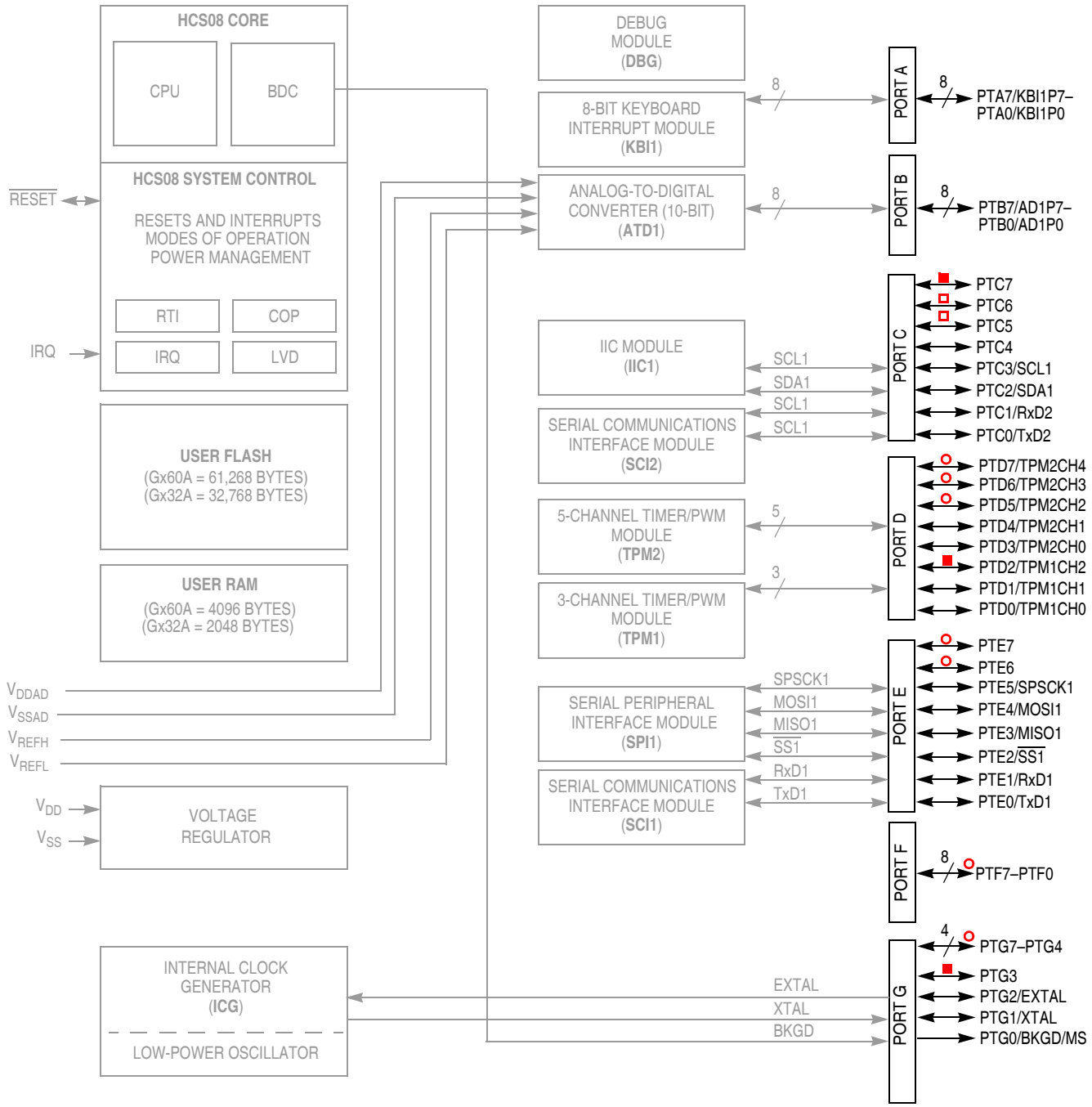

Note: Not all pins are bonded out in all packages. See Table 2-2 for complete details.

Block Diagram Symbol Key:
○ = Not connected in 48-, 44-, and 42-pin packages
■ = Not connected in 44- and 42-pin packages
□ = Not connected in 42-pin packages

Figure 6-1. Block Diagram Highlighting Parallel Input/Output Pins

6.2 Features

Parallel I/O features, depending on package choice, include:

- A total of 56 general-purpose I/O pins in seven ports (PTG0 is output only)
- High-current drivers on port C and port F pins
- Hysteresis input buffers
- Software-controlled pullups on each input pin
- Software-controlled slew rate output buffers
- Eight port A pins shared with KBI1
- Eight port B pins shared with ATD1
- Eight high-current port C pins shared with SCI2 and IIC1
- Eight port D pins shared with TPM1 and TPM2
- Eight port E pins shared with SCI1 and SPI1
- Eight high-current port F pins
- Eight port G pins shared with EXTAL, XTAL, and BKGD/MS

6.3 Pin Descriptions

The MC9S08GBxxA/GTxxA has a total of 56 parallel I/O pins (one is output only) in seven 8-bit ports (PTA–PTG). Not all pins are bonded out in all packages. Consult the pin assignment in Chapter 2, "Pins and Connections," for available parallel I/O pins. All of these pins are available for general-purpose I/O when they are not used by other on-chip peripheral systems.

After reset, BKGD/MS is enabled and therefore is not usable as an output pin until BKGDPE in SOPT is cleared. The rest of the peripheral functions are disabled. After reset, all data direction and pullup enable controls are set to 0s. These pins default to being high-impedance inputs with on-chip pullup devices disabled.

The following paragraphs discuss each port and the software controls that determine each pin's use.

6.3.1 Port A and Keyboard Interrupts

Port A		Bit 7	6	5	4	3	2	1	Bit 0
	MCU Pin:	PTA7/ KBI1P7	PTA6/ KBI1P6	PTA5/ KBI1P5	PTA4/ KBI1P4	PTA3/ KBI1P3	PTA2/ KBI1P2	PTA1/ KBI1P1	PTA0/ KBI1P0

Figure 6-2. Port A Pin Names

Port A is an 8-bit port shared among the KBI keyboard interrupt inputs and general-purpose I/O. Any pins enabled as KBI inputs will be forced to act as inputs.

Port A pins are available as general-purpose I/O pins controlled by the port A data (PTAD), data direction (PTADD), pullup enable (PTAPE), and slew rate control (PTASE) registers. Refer to Section 6.4, "Parallel I/O Controls," for more information about general-purpose I/O control.

Port A can be configured to be keyboard interrupt input pins. Refer to Chapter 9, “Keyboard Interrupt (S08KBIV1),” for more information about using port A pins as keyboard interrupts pins.

6.3.2 Port B and Analog to Digital Converter Inputs

Port B		Bit 7	6	5	4	3	2	1	Bit 0
	MCU Pin:	PTB7/ AD1P7	PTB6/ AD1P6	PTB5/ AD1P5	PTB4/ AD1P4	PTB3/ AD1P3	PTB2/ AD1P2	PTB1/ AD1P1	PTB0/ AD1P0

Figure 6-3. Port B Pin Names

Port B is an 8-bit port shared among the ATD inputs and general-purpose I/O. Any pin enabled as an ATD input will be forced to act as an input.

Port B pins are available as general-purpose I/O pins controlled by the port B data (PTBD), data direction (PTBDD), pullup enable (PTBPE), and slew rate control (PTBSE) registers. Refer to Section 6.4, “Parallel I/O Controls,” for more information about general-purpose I/O control.

When the ATD module is enabled, analog pin enables are used to specify which pins on port B will be used as ATD inputs. Refer to Chapter 14, “Analog-to-Digital Converter (S08ATDV3),” for more information about using port B pins as ATD pins.

6.3.3 Port C and SCI2, IIC, and High-Current Drivers

Port C		Bit 7	6	5	3	3	2	1	Bit 0
	MCU Pin:	PTC7	PTC6	PTC5	PTC4	PTC3/ SCL1	PTC2/ SDA1	PTC1/ RxD2	PTC0/ TxD2

Figure 6-4. Port C Pin Names

Port C is an 8-bit port which is shared among the SCI2 and IIC1 modules, and general-purpose I/O. When SCI2 or IIC1 modules are enabled, the pin direction will be controlled by the module or function. Port C has high current output drivers.

Port C pins are available as general-purpose I/O pins controlled by the port C data (PTCD), data direction (PTCDD), pullup enable (PTCPE), and slew rate control (PTCSE) registers. Refer to Section 6.4, “Parallel I/O Controls,” for more information about general-purpose I/O control.

When the SCI2 module is enabled, PTC0 serves as the SCI2 module’s transmit pin (TxD2) and PTC1 serves as the receive pin (RxD2). Refer to Chapter 11, “Serial Communications Interface (S08SCIV1),” for more information about using PTC0 and PTC1 as SCI pins

When the IIC module is enabled, PTC2 serves as the IIC modules’s serial data input/output pin (SDA1) and PTC3 serves as the clock pin (SCL1). Refer to Chapter 13, “Inter-Integrated Circuit (S08IICV1),” for more information about using PTC2 and PTC3 as IIC pins.

6.3.4 Port D, TPM1 and TPM2

Port D	Bit 7	6	5	4	3	2	1	Bit 0
MCU Pin:	PTD7/ TPM2CH4	PTD6/ TPM2CH3	PTD5/ TPM2CH2	PTD4/ TPM2CH1	PTD3/ TPM2CH0	PTD2/ TPM1CH2	PTD1/ TPM1CH1	PTD0/ TPM1CH0

Figure 6-5. Port D Pin Names

Port D is an 8-bit port shared with the two TPM modules, TPM1 and TPM2, and general-purpose I/O. When the TPM1 or TPM2 modules are enabled in output compare or input capture modes of operation, the pin direction will be controlled by the module function.

Port D pins are available as general-purpose I/O pins controlled by the port D data (PTDD), data direction (PTDDD), pullup enable (PTDPE), and slew rate control (PTDSE) registers. Refer to Section 6.4, “Parallel I/O Controls” for more information about general-purpose I/O control.

The TPM2 module can be configured to use PTD7–PTD3 as either input capture, output compare, PWM, or external clock input pins (PTD3 only). Refer to Chapter 10, “Timer/PWM (S08TPMV1)” for more information about using PTD7–PTD3 as timer pins.

The TPM1 module can be configured to use PTD2–PTD0 as either input capture, output compare, PWM, or external clock input pins (PTD0 only). Refer to Chapter 10, “Timer/PWM (S08TPMV1)” for more information about using PTD2–PTD0 as timer pins.

6.3.5 Port E, SCI1, and SPI

Port E	Bit 7	6	5	4	3	2	1	Bit 0
MCU Pin:	PTE7	PTE6	PTE5/ SPSCK1	PTE4/ MOSI1	PTE3/ MISO1	PTE2/ $\overline{\text{SS1}}$	PTE1/ RxD1	PTE0/ TxD1

Figure 6-6. Port E Pin Names

Port E is an 8-bit port shared with the SCI1 module, SPI1 module, and general-purpose I/O. When the SCI or SPI modules are enabled, the pin direction will be controlled by the module function.

Port E pins are available as general-purpose I/O pins controlled by the port E data (PTED), data direction (PTEDD), pullup enable (PTEPE), and slew rate control (PTESE) registers. Refer to Section 6.4, “Parallel I/O Controls” for more information about general-purpose I/O control.

When the SCI1 module is enabled, PTE0 serves as the SCI1 module’s transmit pin (TxD1) and PTE1 serves as the receive pin (RxD1). Refer to Chapter 11, “Serial Communications Interface (S08SCIV1)” for more information about using PTE0 and PTE1 as SCI pins.

When the SPI module is enabled, PTE2 serves as the SPI module’s slave select pin ($\overline{\text{SS1}}$), PTE3 serves as the master-in slave-out pin (MISO1), PTE4 serves as the master-out slave-in pin (MOSI1), and PTE5 serves as the SPI clock pin (SPSCK1). Refer to Chapter 12, “Serial Peripheral Interface (S08SPIV3) for more information about using PTE5–PTE2 as SPI pins.

6.3.6 Port F and High-Current Drivers

Port F		Bit 7	6	5	4	3	2	1	Bit 0
	MCU Pin:	PTF7	PTF6	PTF5	PTF4	PTF3	PTF2	PTF1	PTF0

Figure 6-7. Port F Pin Names

Port F is an 8-bit port general-purpose I/O that is not shared with any peripheral module. Port F has high current output drivers.

Port F pins are available as general-purpose I/O pins controlled by the port F data (PTFD), data direction (PTFDD), pullup enable (PTFPE), and slew rate control (PTFSE) registers. Refer to Section 6.4, “Parallel I/O Controls” for more information about general-purpose I/O control.

6.3.7 Port G, BKGD/MS, and Oscillator

Port G		Bit 7	6	5	4	3	2	1	Bit 0
	MCU Pin:	PTG7	PTG6	PTG5	PTG4	PTG3	PTG2/ EXTAL	PTG1/ XTAL	PTG0/ BKGD/MS

Figure 6-8. Port G Pin Names

Port G is an 8-bit port which is shared among the background/mode select function, oscillator, and general-purpose I/O. When the background/mode select function or oscillator is enabled, the pin direction will be controlled by the module function.

Port G pins are available as general-purpose I/O pins controlled by the port G data (PTGD), data direction (PTGDD), pullup enable (PTGPE), and slew rate control (PTGSE) registers. Refer to Section 6.4, “Parallel I/O Controls” for more information about general-purpose I/O control.

The internal pullup for PTG0 is enabled when the background/mode select function is enabled, regardless of the state of PTGPE0. During reset, the BKGD/MS pin functions as a mode select pin. After the MCU is out of reset, the BKGD/MS pin becomes the background communications input/output pin. The PTG0 can be configured to be a general-purpose output pin. Refer to Chapter 3, “Modes of Operation”, Chapter 5, “Resets, Interrupts, and System Configuration”, and Chapter 15, “Development Support” for more information about using this pin.

The ICG module can be configured to use PTG2–PTG1 ports as crystal oscillator or external clock pins.

Refer to Chapter 13, “Inter-Integrated Circuit (S08IICV1)” for more information about using these pins as oscillator pins.

6.4 Parallel I/O Controls

Provided no on-chip peripheral is controlling a port pin, the pins operate as general-purpose I/O pins that are accessed and controlled by a data register (PTxD), a data direction register (PTxDD), a pullup enable register (PTxPE), and a slew rate control register (PTxSE) where x is A, B, C, D, E, F, or G.

Reads of the data register return the pin value (if PTxDDn = 0) or the contents of the port data register (if PTxDDn = 1). Writes to the port data register are latched into the port register whether the pin is controlled by an on-chip peripheral or the pin is configured as an input. If the corresponding pin is not controlled by a peripheral and is configured as an output, this level will be driven out the port pin.

6.4.1 Data Direction Control

The data direction control bits determine whether the pin output driver is enabled, and they control what is read for port data register reads. Each port pin has a data direction control bit. When PTxDDn = 0, the corresponding pin is an input and reads of PTxD return the pin value. When PTxDDn = 1, the corresponding pin is an output and reads of PTxD return the last value written to the port data register. When a peripheral module or system function is in control of a port pin, the data direction control still controls what is returned for reads of the port data register, even though the peripheral system has overriding control of the actual pin direction.

For the MC9S08GBxxA/GTxxA MCU, reads of PTG0/BKGD/MS will return the value on the output pin.

It is a good programming practice to write to the port data register before changing the direction of a port pin to become an output. This ensures that the pin will not be driven momentarily with an old data value that happened to be in the port data register.

6.4.2 Internal Pullup Control

An internal pullup device can be enabled for each port pin that is configured as an input (PTxDDn = 0). The pullup device is available for a peripheral module to use, provided the peripheral is enabled and is an input function as long as the PTxDDn = 0.

For the four configurable KBI module inputs on PTA7–PTA4, when a pin is configured to detect rising edges, the port pullup enable associated with the pin (PTAPEn) selects a pulldown rather than a pullup device.

6.4.3 Slew Rate Control

Slew rate control can be enabled for each port pin that is configured as an output (PTxDDn = 1) or if a peripheral module is enabled and its function is an output. Not all peripheral modules' outputs have slew rate control; refer to Chapter 2, "Pins and Connections" for more information about which pins have slew rate control.

6.5 Stop Modes

Depending on the stop mode, I/O functions differently as the result of executing a STOP instruction. An explanation of I/O behavior for the various stop modes follows:

- When the MCU enters stop1 mode, all internal registers including general-purpose I/O control and data registers are powered down. All of the general-purpose I/O pins assume their reset state: output buffers and pullups turned off. Upon exit from stop1, all I/O must be initialized as if the MCU had been reset.
- When the MCU enters stop2 mode, the internal registers are powered down as in stop1 but the I/O pin states are latched and held. For example, a port pin that is an output driving low continues to function as an output driving low even though its associated data direction and output data registers are powered down internally. Upon exit from stop2, the pins continue to hold their states until a 1 is written to the PPDACK bit. To avoid discontinuity in the pin state following exit from stop2, the user must restore the port control and data registers to the values they held before entering stop2. These values can be stored in RAM before entering stop2 because the RAM is maintained during stop2.
- In stop3 mode, all I/O is maintained because internal logic circuity stays powered up. Upon recovery, normal I/O function is available to the user.

6.6 Parallel I/O Registers and Control Bits

This section provides information about all registers and control bits associated with the parallel I/O ports.

Refer to tables in Chapter 4, “Memory” for the absolute address assignments for all parallel I/O registers. This section refers to registers and control bits only by their names. A Freescale-provided equate or header file normally is used to translate these names into the appropriate absolute addresses.

6.6.1 Port A Registers (PTAD, PTAPE, PTASE, and PTADD)

Port A includes eight pins shared between general-purpose I/O and the KBI module. Port A pins used as general-purpose I/O pins are controlled by the port A data (PTAD), data direction (PTADD), pullup enable (PTAPE), and slew rate control (PTASE) registers.

If the KBI takes control of a port A pin, the corresponding PTASE bit is ignored since the pin functions as an input. As long as PTADD is 0, the PTAPE controls the pullup enable for the KBI function. Reads of PTAD will return the logic value of the corresponding pin, provided PTADD is 0.

	7	6	5	4	3	2	1	0
R W	PTAD7	PTAD6	PTAD5	PTAD4	PTAD3	PTAD2	PTAD1	PTAD0
Reset	0	0	0	0	0	0	0	0

Figure 6-9. Port A Data Register (PTAD)

Table 6-1. PTAD Field Descriptions

Field	Description
7:0 PTAD[7:0]	**Port A Data Register Bits** — For port A pins that are inputs, reads return the logic level on the pin. For port A pins that are configured as outputs, reads return the last value written to this register. Writes are latched into all bits of this register. For port A pins that are configured as outputs, the logic level is driven out the corresponding MCU pin. Reset forces PTAD to all 0s, but these 0s are not driven out the corresponding pins because reset also configures all port pins as high-impedance inputs with pullups disabled.

	7	6	5	4	3	2	1	0
R W	PTAPE7	PTAPE6	PTAPE5	PTAPE4	PTAPE3	PTAPE2	PTAPE1	PTAPE0
Reset	0	0	0	0	0	0	0	0

Figure 6-10. Pullup Enable for Port A (PTAPE)

Table 6-2. PTAPE Field Descriptions

Field	Description
7:0 PTAPE[7:0]	**Pullup Enable for Port A Bits** — For port A pins that are inputs, these read/write control bits determine whether internal pullup devices are enabled provided the corresponding PTADDn is 0. For port A pins that are configured as outputs, these bits are ignored and the internal pullup devices are disabled. When any of bits 7 through 4 of port A are enabled as KBI inputs and are configured to detect rising edges/high levels, the pullup enable bits enable pulldown rather than pullup devices. 0 Internal pullup device disabled. 1 Internal pullup device enabled.

	7	6	5	4	3	2	1	0
R W	PTASE7	PTASE6	PTASE5	PTASE4	PTASE3	PTASE2	PTASE1	PTASE0
Reset	0	0	0	0	0	0	0	0

Figure 6-11. Slew Rate Control Enable for Port A (PTASE)

Table 6-3. PTASE Field Descriptions

Field	Description
7:0 PTASE[7:0]	**Slew Rate Control Enable for Port A Bits** — For port A pins that are outputs, these read/write control bits determine whether the slew rate controlled outputs are enabled. For port A pins that are configured as inputs, these bits are ignored. 0 Slew rate control disabled. 1 Slew rate control enabled.

	7	6	5	4	3	2	1	0
R W	PTADD7	PTADD6	PTADD5	PTADD4	PTADD3	PTADD2	PTADD1	PTADD0
Reset	0	0	0	0	0	0	0	0

Figure 6-12. Data Direction for Port A (PTADD)

Table 6-4. PTADD Field Descriptions

Field	Description
7:0 PTADD[7:0]	**Data Direction for Port A Bits** — These read/write bits control the direction of port A pins and what is read for PTAD reads. 0 Input (output driver disabled) and reads return the pin value. 1 Output driver enabled for port A bit n and PTAD reads return the contents of PTADn.

6.6.2 Port B Registers (PTBD, PTBPE, PTBSE, and PTBDD)

Port B includes eight general-purpose I/O pins that share with the ATD function. Port B pins used as general-purpose I/O pins are controlled by the port B data (PTBD), data direction (PTBDD), pullup enable (PTBPE), and slew rate control (PTBSE) registers.

If the ATD takes control of a port B pin, the corresponding PTBDD, PTBSE, and PTBPE bits are ignored. When a port B pin is being used as an ATD pin, reads of PTBD will return a 0 of the corresponding pin, provided PTBDD is 0.

	7	6	5	4	3	2	1	0
R W	PTBD7	PTBD6	PTBD5	PTBD4	PTBD3	PTBD2	PTBD1	PTBD0
Reset	0	0	0	0	0	0	0	0

Figure 6-13. Port B Data Register (PTBD)

Table 6-5. PTBD Field Descriptions

Field	Description
7:0 PTBD[7:0]	**Port B Data Register Bits** — For port B pins that are inputs, reads return the logic level on the pin. For port B pins that are configured as outputs, reads return the last value written to this register. Writes are latched into all bits of this register. For port B pins that are configured as outputs, the logic level is driven out the corresponding MCU pin. Reset forces PTBD to all 0s, but these 0s are not driven out on the corresponding pins because reset also configures all port pins as high-impedance inputs with pullups disabled.

	7	6	5	4	3	2	1	0
R W	PTBPE7	PTBPE6	PTBPE5	PTBPE4	PTBPE3	PTBPE2	PTBPE1	PTBPE0
Reset	0	0	0	0	0	0	0	0

Figure 6-14. Pullup Enable for Port B (PTBPE)

Table 6-6. PTBPE Field Descriptions

Field	Description
7:0 PTBPE[7:0]	**Pullup Enable for Port B Bits** — For port B pins that are inputs, these read/write control bits determine whether internal pullup devices are enabled. For port B pins that are configured as outputs, these bits are ignored and the internal pullup devices are disabled. 0 Internal pullup device disabled. 1 Internal pullup device enabled.

	7	6	5	4	3	2	1	0
R W	PTBSE7	PTBSE6	PTBSE5	PTBSE4	PTBSE3	PTBSE2	PTBSE1	PTBSE0
Reset	0	0	0	0	0	0	0	0

Figure 6-15. Data Direction for Port A (PTBSE)

Table 6-7. PTBSE Field Descriptions

Field	Description
7:0 PTBSE[7:0]	**Slew Rate Control Enable for Port B Bits** — For port B pins that are outputs, these read/write control bits determine whether the slew rate controlled outputs are enabled. For port B pins that are configured as inputs, these bits are ignored. 0 Slew rate control disabled. 1 Slew rate control enabled.

	7	6	5	4	3	2	1	0
R W	PTBDD7	PTBDD6	PTBDD5	PTBDD4	PTBDD3	PTBDD2	PTBDD1	PTBDD0
Reset	0	0	0	0	0	0	0	0

Figure 6-16. Data Direction for Port B (PTBDD)

Table 6-8. PTBDD Field Descriptions

Field	Description
7:0 PTBDD[7:0]	**Data Direction for Port B Bits** — These read/write bits control the direction of port B pins and what is read for PTBD reads. 0 Input (output driver disabled) and reads return the pin value. 1 Output driver enabled for port B bit n and PTBD reads return the contents of PTBDn.

6.6.3 Port C Registers (PTCD, PTCPE, PTCSE, and PTCDD)

Port C includes eight general-purpose I/O pins that share with the SCI2 and IIC modules. Port C pins used as general-purpose I/O pins are controlled by the port C data (PTCD), data direction (PTCDD), pullup enable (PTCPE), and slew rate control (PTCSE) registers.

If the SCI2 takes control of a port C pin, the corresponding PTCDD bit is ignored. PTCSE can be used to provide slew rate on the SCI2 transmit pin, TxD2. PTCPE can be used, provided the corresponding PTCDD bit is 0, to provide a pullup device on the SCI2 receive pin, RxD2.

If the IIC takes control of a port C pin, the corresponding PTCDD bit is ignored. PTCSE can be used to provide slew rate on the IIC serial data pin (SDA1), when in output mode and the IIC clock pin (SCL1). PTCPE can be used, provided the corresponding PTCDD bit is 0, to provide a pullup device on the IIC serial data pin, when in receive mode.

Reads of PTCD will return the logic value of the corresponding pin, provided PTCDD is 0.

	7	6	5	4	3	2	1	0
R W	PTCD7	PTCD6	PTCD5	PTCD4	PTCD3	PTCD2	PTCD1	PTCD0
Reset	0	0	0	0	0	0	0	0

Figure 6-17. Port C Data Register (PTCD)

Table 6-9. PTCD Field Descriptions

Field	Description
7:0 PTCD[7:0]	**Port C Data Register Bits**— For port C pins that are inputs, reads return the logic level on the pin. For port C pins that are configured as outputs, reads return the last value written to this register. Writes are latched into all bits of this register. For port C pins that are configured as outputs, the logic level is driven out the corresponding MCU pin. Reset forces PTCD to all 0s, but these 0s are not driven out the corresponding pins because reset also configures all port pins as high-impedance inputs with pullups disabled.

	7	6	5	4	3	2	1	0
R W	PTCPE7	PTCPE6	PTCPE5	PTCPE4	PTCPE3	PTCPE2	PTCPE1	PTCPE0
Reset	0	0	0	0	0	0	0	0

Figure 6-18. Pullup Enable for Port C (PTCPE)

Table 6-10. PTCPE Field Descriptions

Field	Description
7:0 PTCPE[7:0]	**Pullup Enable for Port C Bits** — For port C pins that are inputs, these read/write control bits determine whether internal pullup devices are enabled. For port C pins that are configured as outputs, these bits are ignored and the internal pullup devices are disabled. 0 Internal pullup device disabled. 1 Internal pullup device enabled.

	7	6	5	4	3	2	1	0
R W	PTCSE7	PTCSE6	PTCSE5	PTCSE4	PTCSE3	PTCSE2	PTCSE1	PTCSE0
Reset	0	0	0	0	0	0	0	0

Figure 6-19. Slew Rate Control Enable for Port C (PTCSE)

Table 6-11. PTCSE Field Descriptions

Field	Description
7:0 PTCSE[7:0]	**Slew Rate Control Enable for Port C Bits** — For port C pins that are outputs, these read/write control bits determine whether the slew rate controlled outputs are enabled. For port B pins that are configured as inputs, these bits are ignored. 0 Slew rate control disabled. 1 Slew rate control enabled.

	7	6	5	4	3	2	1	0
R W	PTCDD7	PTCDD6	PTCDD5	PTCDD4	PTCDD3	PTCDD2	PTCDD1	PTCDD0
Reset	0	0	0	0	0	0	0	0

Figure 6-20. Data Direction for Port C (PTCDD)

Table 6-12. PTCDD Field Descriptions

Field	Description
7:0 PTCDD[7:0]	**Data Direction for Port C Bits** — These read/write bits control the direction of port C pins and what is read for PTCD reads. 0 Input (output driver disabled) and reads return the pin value. 1 Output driver enabled for port C bit n and PTCD reads return the contents of PTCDn.

6.6.4 Port D Registers (PTDD, PTDPE, PTDSE, and PTDDD)

Port D includes eight pins shared between general-purpose I/O, TPM1, and TPM2. Port D pins used as general-purpose I/O pins are controlled by the port D data (PTDD), data direction (PTDDD), pullup enable (PTDPE), and slew rate control (PTDSE) registers.

If a TPM takes control of a port D pin, the corresponding PTDDD bit is ignored. When the TPM is in output compare mode, the corresponding PTDSE can be used to provide slew rate on the pin. When the TPM is in input capture mode, the corresponding PTDPE can be used, provided the corresponding PTDDD bit is 0, to provide a pullup device on the pin.

Reads of PTDD will return the logic value of the corresponding pin, provided PTDDD is 0.

	7	6	5	4	3	2	1	0
R W	PTDD7	PTDD6	PTDD5	PTDD4	PTDD3	PTDD2	PTDD1	PTDD0
Reset	0	0	0	0	0	0	0	0

Figure 6-21. Port D Data Register (PTDD)

Table 6-13. PTDD Field Descriptions

Field	Description
7:0 PTDD[7:0]	**Port D Data Register Bits** — For port D pins that are inputs, reads return the logic level on the pin. For port D pins that are configured as outputs, reads return the last value written to this register. Writes are latched into all bits of this register. For port D pins that are configured as outputs, the logic level is driven out the corresponding MCU pin. Reset forces PTDD to all 0s, but these 0s are not driven out the corresponding pins because reset also configures all port pins as high-impedance inputs with pullups disabled.

	7	6	5	4	3	2	1	0
R W	PTDPE7	PTDPE6	PTDPE5	PTDPE4	PTDPE3	PTDPE2	PTDPE1	PTDPE0
Reset	0	0	0	0	0	0	0	0

Figure 6-22. Pullup Enable for Port D (PTDPE)

Table 6-14. PTDPE Field Descriptions

Field	Description
7:0 PTDPE[7:0]	**Pullup Enable for Port D Bits** — For port D pins that are inputs, these read/write control bits determine whether internal pullup devices are enabled. For port D pins that are configured as outputs, these bits are ignored and the internal pullup devices are disabled. 0 Internal pullup device disabled. 1 Internal pullup device enabled.

	7	6	5	4	3	2	1	0
R W	PTDSE7	PTDSE6	PTDSE5	PTDSE4	PTDSE3	PTDSE2	PTDSE1	PTDSE0
Reset	0	0	0	0	0	0	0	0

Figure 6-23. Slew Rate Control Enable for Port D (PTDSE)

Table 6-15. PTDSE Field Descriptions

Field	Description
7:0 PTDSE[7:0]	**Slew Rate Control Enable for Port D Bits** — For port D pins that are outputs, these read/write control bits determine whether the slew rate controlled outputs are enabled. For port D pins that are configured as inputs, these bits are ignored. 0 Slew rate control disabled. 1 Slew rate control enabled.

	7	6	5	4	3	2	1	0
R W	PTDDD7	PTDDD6	PTDDD5	PTDDD4	PTDDD3	PTDDD2	PTDDD1	PTDDD0
Reset	0	0	0	0	0	0	0	0

Figure 6-24. Data Direction for Port D (PTDDD)

Table 6-16. PTDDD Field Descriptions

Field	Description
7:0 PTDDD[7:0]	**Data Direction for Port D Bits** — These read/write bits control the direction of port D pins and what is read for PTDD reads. 0 Input (output driver disabled) and reads return the pin value. 1 Output driver enabled for port D bit n and PTDD reads return the contents of PTDDn.

6.6.5 Port E Registers (PTED, PTEPE, PTESE, and PTEDD)

Port E includes eight general-purpose I/O pins that share with the SCI1 and SPI modules. Port E pins used as general-purpose I/O pins are controlled by the port E data (PTED), data direction (PTEDD), pullup enable (PTEPE), and slew rate control (PTESE) registers.

If the SCI1 takes control of a port E pin, the corresponding PTEDD bit is ignored. PTESE can be used to provide slew rate on the SCI1 transmit pin, TxD1. PTEPE can be used, provided the corresponding PTEDD bit is 0, to provide a pullup device on the SCI1 receive pin, RxD1.

If the SPI takes control of a port E pin, the corresponding PTEDD bit is ignored. PTESE can be used to provide slew rate on the SPI serial output pin (MOSI1 or MISO1) and serial clock pin (SPSCK1) depending on the SPI operational mode. PTEPE can be used, provided the corresponding PTEDD bit is 0, to provide a pullup device on the SPI serial input pins (MOSI1 or MISO1) and slave select pin ($\overline{SS1}$) depending on the SPI operational mode.

Reads of PTED will return the logic value of the corresponding pin, provided PTEDD is 0.

	7	6	5	4	3	2	1	0
R W	PTED7	PTED6	PTED5	PTED4	PTED3	PTED2	PTED1	PTED0
Reset	0	0	0	0	0	0	0	0

Figure 6-25. Port E Data Register (PTED)

Table 6-17. PTED Field Descriptions

Field	Description
7:0 PTED[7:0]	**Port E Data Register Bits** — For port E pins that are inputs, reads return the logic level on the pin. For port E pins that are configured as outputs, reads return the last value written to this register. Writes are latched into all bits in this register. For port E pins that are configured as outputs, the logic level is driven out the corresponding MCU pin. Reset forces PTED to all 0s, but these 0s are not driven out the corresponding pins because reset also configures all port pins as high-impedance inputs with pullups disabled.

	7	6	5	4	3	2	1	0
R W	PTEPE7	PTEPE6	PTEPE5	PTEPE4	PTEPE3	PTEPE2	PTEPE1	PTEPE0
Reset	0	0	0	0	0	0	0	0

Figure 6-26. Pullup Enable for Port E (PTEPE)

Table 6-18. PTEPE Field Descriptions

Field	Description
7:0 PTEPE[7:0]	**Pullup Enable for Port E Bits** — For port E pins that are inputs, these read/write control bits determine whether internal pullup devices are enabled. For port E pins that are configured as outputs, these bits are ignored and the internal pullup devices are disabled. 0 Internal pullup device disabled. 1 Internal pullup device enabled.

	7	6	5	4	3	2	1	0
R W	PTESE7	PTESE6	PTESE5	PTESE4	PTESE3	PTESE2	PTESE1	PTESE0
Reset	0	0	0	0	0	0	0	0

Figure 6-27. Slew Rate Control Enable for Port E (PTESE)

Table 6-19. PTESE Field Descriptions

Field	Description
7:0 PTESE[7:0]	**Slew Rate Control Enable for Port E Bits —** For port E pins that are outputs, these read/write control bits determine whether the slew rate controlled outputs are enabled. For port E pins that are configured as inputs, these bits are ignored. 0 Slew rate control disabled. 1 Slew rate control enabled.

	7	6	5	4	3	2	1	0
R W	PTEDD7	PTEDD6	PTEDD5	PTEDD4	PTEDD3	PTEDD2	PTEDD1	PTEDD0
Reset	0	0	0	0	0	0	0	0

Figure 6-28. Data Direction for Port E (PTEDD)

Table 6-20. PTEDD Field Descriptions

Field	Description
7:0 PTEDD[7:0]	**Data Direction for Port E Bits** — These read/write bits control the direction of port E pins and what is read for PTED reads. 0 Input (output driver disabled) and reads return the pin value. 1 Output driver enabled for port E bit n and PTED reads return the contents of PTEDn.

6.6.6 Port F Registers (PTFD, PTFPE, PTFSE, and PTFDD)

Port F includes eight general-purpose I/O pins that are not shared with any peripheral module. Port F pins used as general-purpose I/O pins are controlled by the port F data (PTFD), data direction (PTFDD), pullup enable (PTFPE), and slew rate control (PTFSE) registers.

	7	6	5	4	3	2	1	0
R W	PTFD7	PTFD6	PTFD5	PTFD4	PTFD3	PTFD2	PTFD1	PTFD0
Reset	0	0	0	0	0	0	0	0

Figure 6-29. Port PTF Data Register (PTFD)

Table 6-21. PTFD Field Descriptions

Field	Description
7:0 PTFD[7:0]	**Port PTF Data Register Bits** — For port F pins that are inputs, reads return the logic level on the pin. For port F pins that are configured as outputs, reads return the last value written to this register. Writes are latched into all bits of this register. For port F pins that are configured as outputs, the logic level is driven out the corresponding MCU pin. Reset forces PTFD to all 0s, but these 0s are not driven out the corresponding pins because reset also configures all port pins as high-impedance inputs with pullups disabled.

	7	6	5	4	3	2	1	0
R W	PTFPE7	PTFPE6	PTFPE5	PTFPE4	PTFPE3	PTFPE2	PTFPE1	PTFPE0
Reset	0	0	0	0	0	0	0	0

Figure 6-30. Pullup Enable for Port F (PTFPE)

Table 6-22. PTFPE Field Descriptions

Field	Description
7:0 PTFPE[7:0]	**Pullup Enable for Port F Bits** — For port F pins that are inputs, these read/write control bits determine whether internal pullup devices are enabled. For port F pins that are configured as outputs, these bits are ignored and the internal pullup devices are disabled. 0 Internal pullup device disabled. 1 Internal pullup device enabled.

	7	6	5	4	3	2	1	0
R W	PTFSE7	PTFSE6	PTFSE5	PTFSE4	PTFSE3	PTFSE2	PTFSE1	PTFSE0
Reset	0	0	0	0	0	0	0	0

Figure 6-31. Slew Rate Control Enable for Port F (PTFSE)

Table 6-23. PTFSE Field Descriptions

Field	Description
7:0 PTFSE[7:0]	**Slew Rate Control Enable for Port F Bits** — For port F pins that are outputs, these read/write control bits determine whether the slew rate controlled outputs are enabled. For port F pins that are configured as inputs, these bits are ignored. 0 Slew rate control disabled. 1 Slew rate control enabled.

	7	6	5	4	3	2	1	0
R W	PTFDD7	PTFDD6	PTFDD5	PTFDD4	PTFDD3	PTFDD2	PTFDD1	PTFDD0
Reset	0	0	0	0	0	0	0	0

Figure 6-32. Data Direction for Port F (PTFDD)

Table 6-24. PTFDD Field Descriptions

Field	Description
7:0 PTFDD[7:0]	**Data Direction for Port F Bits** — These read/write bits control the direction of port F pins and what is read for PTFD reads. 0 Input (output driver disabled) and reads return the pin value. 1 Output driver enabled for port F bit n and PTFD reads return the contents of PTFDn.

6.6.7 Port G Registers (PTGD, PTGPE, PTGSE, and PTGDD)

Port G includes eight general-purpose I/O pins that are shared with BKGD/MS function and the oscillator or external clock pins. Port G pins used as general-purpose I/O pins are controlled by the port G data (PTGD), data direction (PTGDD), pullup enable (PTGPE), and slew rate control (PTGSE) registers.

Port pin PTG0, while in reset, defaults to the BKGD/MS pin. After the MCU is out of reset, PTG0 can be configured to be a general-purpose output pin. When BKGD/MS takes control of PTG0, the corresponding PTGDD, PTGPE, and PTGPSE bits are ignored.

Port pins PTG1 and PTG2 can be configured to be oscillator or external clock pins. When the oscillator takes control of a port G pin, the corresponding PTGD, PTGDD, PTGSE, and PTGPE bits are ignored.

Reads of PTGD will return the logic value of the corresponding pin, provided PTGDD is 0.

	7	6	5	4	3	2	1	0
R W	PTGD7	PTGD6	PTGD5	PTGD4	PTGD3	PTGD2	PTGD1	PTGD0
Reset	0	0	0	0	0	0	0	0

Figure 6-33. Port PTG Data Register (PTGD)

Table 6-25. PTGD Field Descriptions

Field	Description
7:0 PTGD[7:0]	**Port PTG Data Register Bits —** For port G pins that are inputs, reads return the logic level on the pin. For port G pins that are configured as outputs, reads return the last value written to this register. Writes are latched into all bits of this register. For port G pins that are configured as outputs, the logic level is driven out the corresponding MCU pin. Reset forces PTGD to all 0s, but these 0s are not driven out the corresponding pins because reset also configures all port pins as high-impedance inputs with pullups disabled.

	7	6	5	4	3	2	1	0
R W	PTGPE7	PTGPE6	PTGPE5	PTGPE4	PTGPE3	PTGPE2	PTGPE1	PTGPE0
Reset	0	0	0	0	0	0	0	0

Figure 6-34. Pullup Enable for Port G (PTGPE)

Table 6-26. PTGPE Field Descriptions

Field	Description
7:0 PTGPE[7:0]	**Pullup Enable for Port G Bits** — For port G pins that are inputs, these read/write control bits determine whether internal pullup devices are enabled. For port G pins that are configured as outputs, these bits are ignored and the internal pullup devices are disabled. 0 Internal pullup device disabled. 1 Internal pullup device enabled.

	7	6	5	4	3	2	1	0
R W	PTGSE7	PTGSE6	PTGSE5	PTGSE4	PTGSE3	PTGSE2	PTGSE1	PTGSE0
Reset	0	0	0	0	0	0	0	0

Figure 6-35. Slew Rate Control Enable for Port G (PTGSE)

Table 6-27. PTGSE Field Descriptions

Field	Description
7:0 PTGSE[7:0]	**Slew Rate Control Enable for Port G Bits** — For port G pins that are outputs, these read/write control bits determine whether the slew rate controlled outputs are enabled. For port G pins that are configured as inputs, these bits are ignored. 0 Slew rate control disabled. 1 Slew rate control enabled.

	7	6	5	4	3	2	1	0
R W	PTGDD7	PTGDD6	PTGDD5	PTGDD4	PTGDD3	PTGDD2	PTGDD1	PTGDD0
Reset	0	0	0	0	0	0	0	0

Figure 6-36. Data Direction for Port G (PTGDD)

Table 6-28. PTGDD Field Descriptions

Field	Description
7:0 PTGDD[7:0]	**Data Direction for Port G Bits** — These read/write bits control the direction of port G pins and what is read for PTGD reads. 0 Input (output driver disabled) and reads return the pin value. 1 Output driver enabled for port G bit n and PTGD reads return the contents of PTGDn.

Chapter 7
Internal Clock Generator (S08ICGV2)

The MC9S08GBxxA/GTxxA microcontroller provides one internal clock generation (ICG) module to create the system bus frequency. All functions described in this section are available on the MC9S08GBxxA/GTxxA microcontroller. The EXTAL and XTAL pins share port G bits 2 and 1, respectively. Analog supply lines V_{DDA} and V_{SSA} are internally derived from the MCU's V_{DD} and V_{SS} pins. Electrical parametric data for the ICG may be found in Appendix A, "Electrical Characteristics."

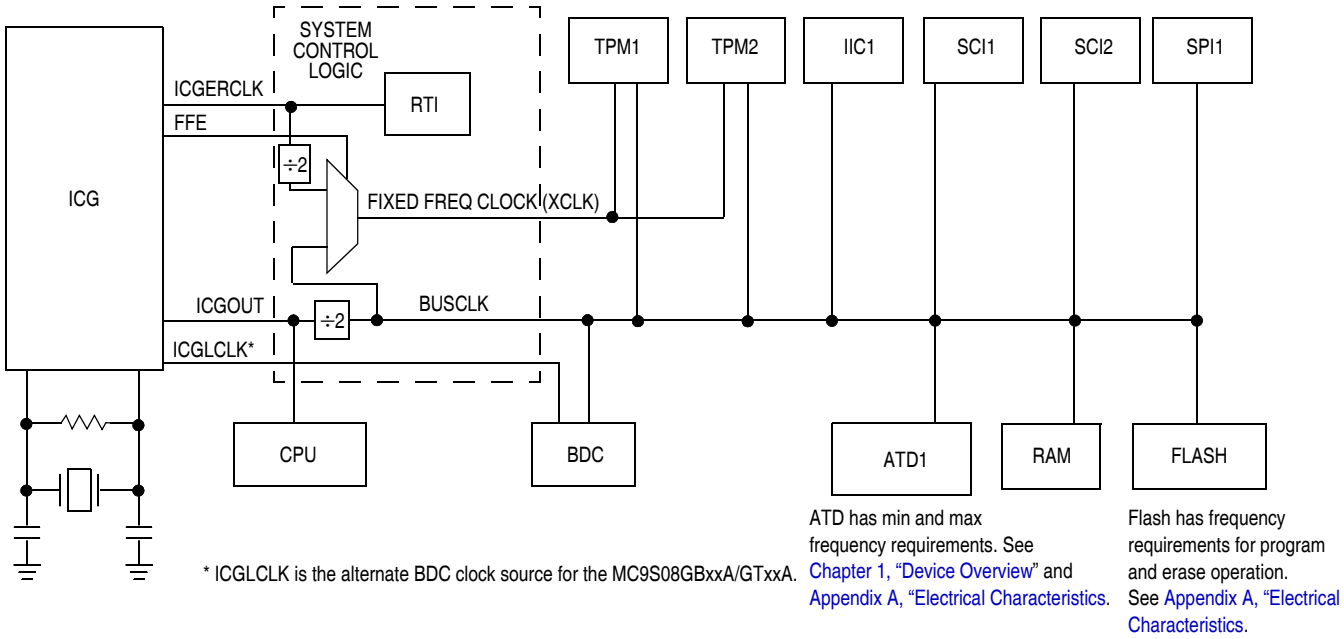

Figure 7-1. System Clock Distribution Diagram

NOTE

Freescale Semiconductor recommends that flash location $FFBE be reserved to store a nonvolatile version of ICGTRM. This will allow debugger and programmer vendors to perform a manual trim operation and store the resultant ICGTRM value for users to access at a later time.

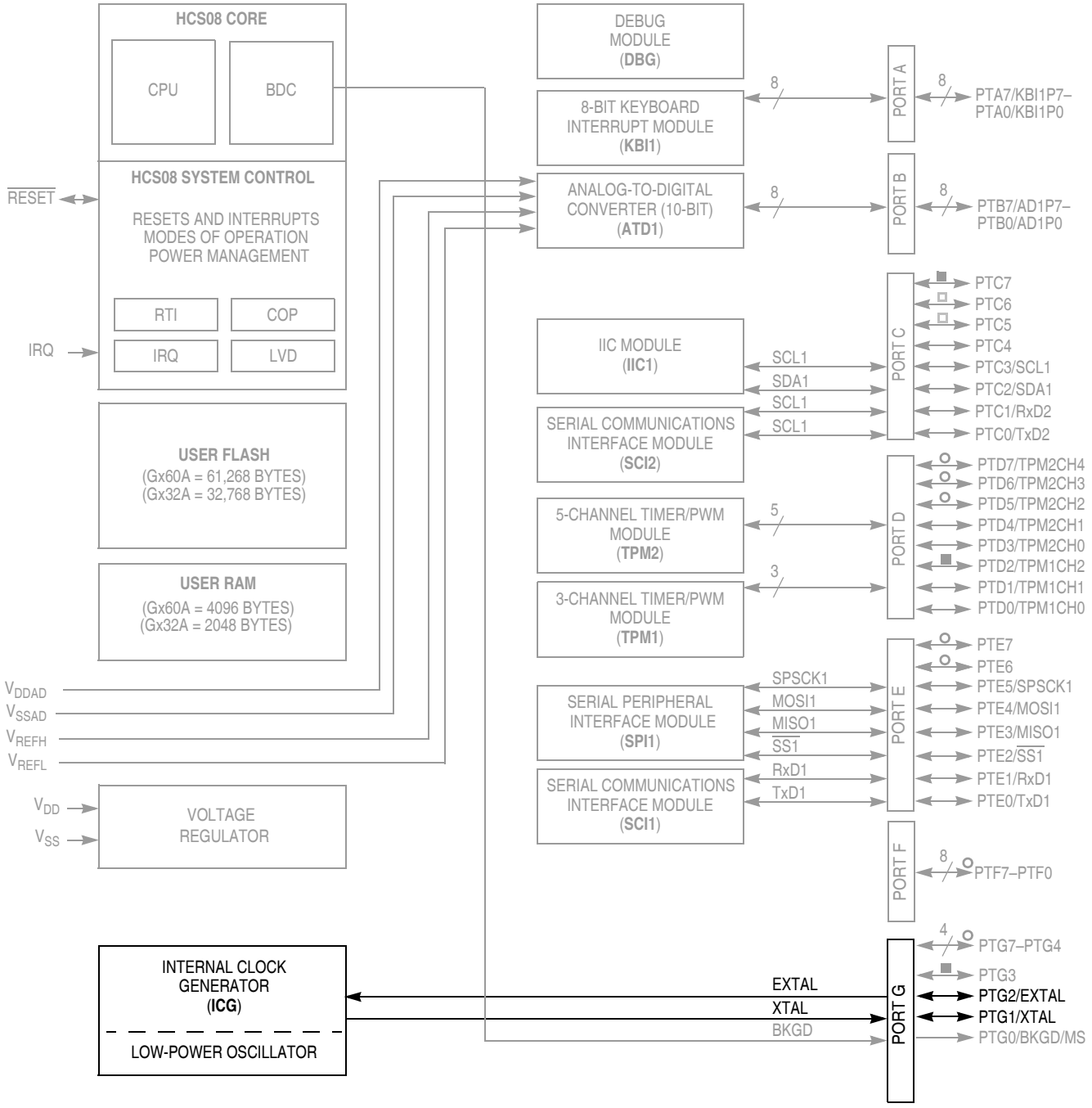

Note: Not all pins are bonded out in all packages. See Table 2-2 for complete details.

Block Diagram Symbol Key:
○ = Not connected in 48-, 44-, and 42-pin packages
■ = Not connected in 44- and 42-pin packages
□ = Not connected in 42-pin packages

Figure 7-2. Block Diagram Highlighting ICG Module

7.1 Introduction

Figure 7-3 is a top-level diagram that shows the functional organization of the internal clock generation (ICG) module. This section includes a general description and a feature list.

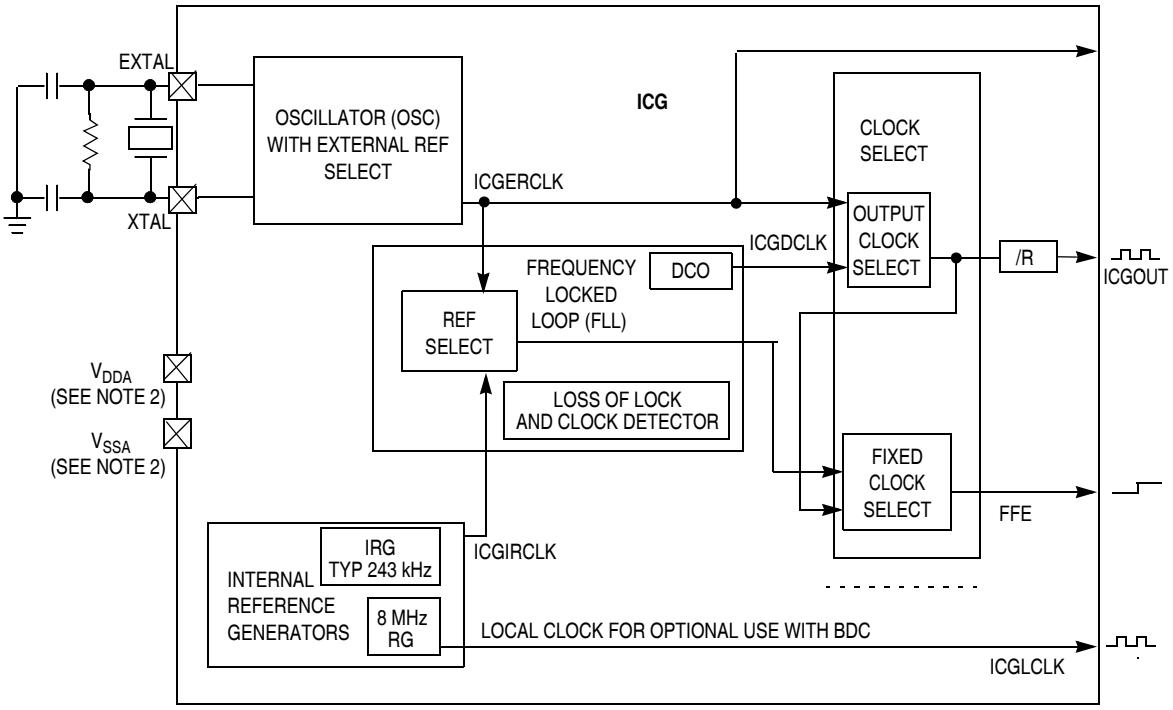

NOTES:
1. See Table 7-1 for specific use of ICGOUT, FFE, ICGLCLK, ICGERCLK
2. Not all HCS08 microcontrollers have unique supply pins for the ICG. See the device pin assignments in Chapter 2, "Pins and Connections for specifics.

Figure 7-3. ICG Block Diagram

The ICG provides multiple options for clock sources. This offers a user great flexibility when making choices between cost, precision, current draw, and performance. As seen in Figure 7-3, the ICG consists of four functional blocks. Each of these is briefly described here and then in more detail in a later section.

- **Oscillator block** — The oscillator block provides means for connecting an external crystal or resonator. Two frequency ranges are software selectable to allow optimal startup and stability. Alternatively, the oscillator block can be used to route an external square wave to the system clock. External sources can provide a very precise clock source. The oscillator is capable of being configured for low power mode or high amplitude mode as selected by HGO.
- **Internal reference generator** — The internal reference generator consists of two controlled clock sources. One is designed to be approximately 8 MHz and can be selected as a local clock for the background debug controller. The other internal reference clock source is typically 243 kHz and can be trimmed for finer accuracy via software when a precise timed event is input to the MCU. This provides a highly reliable, low-cost clock source.
- **Frequency-locked loop** — A frequency-locked loop (FLL) stage takes either the internal or external clock source and multiplies it to a higher frequency. Status bits provide information when the circuit has achieved lock and when it falls out of lock. Additionally, this block can monitor the external reference clock and signals whether the clock is valid or not.

- **Clock select block** — The clock select block provides several switch options for connecting different clock sources to the system clock tree. ICGDCLK is the multiplied clock frequency out of the FLL, ICGERCLK is the reference clock frequency from the crystal or external clock source, and FFE (fixed frequency enable) is a control signal used to control the system fixed frequency clock (XCLK). ICGLCLK is the clock source for the background debug controller (BDC).

The module is intended to be very user friendly with many of the features occurring automatically without user intervention. To quickly configure the module, go to Section 7.4, "Initialization/Application Information" and pick an example that best suits the application needs.

7.1.1 Features

Features of the ICG and clock distribution system:

- Several options for the primary clock source allow a wide range of cost, frequency, and precision choices:
  - 32 kHz–100 kHz crystal or resonator
  - 1 MHz–16 MHz crystal or resonator
  - External clock
  - Internal reference generator
- Defaults to self-clocked mode to minimize startup delays
- Frequency-locked loop (FLL) generates 8 MHz to 40 MHz (for bus rates up to 20 MHz)
  - Uses external or internal clock as reference frequency
- Automatic lockout of non-running clock sources
- Reset or interrupt on loss of clock or loss of FLL lock
- Digitally-controlled oscillator (DCO) preserves previous frequency settings, allowing fast frequency lock when recovering from stop3 mode
- DCO will maintain operating frequency during a loss or removal of reference clock
- Post-FLL divider selects 1 of 8 bus rate divisors (/1 through /128)
- Separate self-clocked source for real-time interrupt
- Trimmable internal clock source supports SCI communications without additional external components
- Automatic FLL engagement after lock is acquired
- Selectable low-power/high-gain oscillator modes

7.1.2 Modes of Operation

This is a high-level description only. Detailed descriptions of operating modes are contained in Section 7.3, "Functional Description."

- Mode 1 — Off

  The output clock, ICGOUT, is static. This mode may be entered when the STOP instruction is executed.
- Mode 2 — Self-clocked (SCM)

  Default mode of operation that is entered out of reset. The ICG's FLL is open loop and the digitally controlled oscillator (DCO) is free running at a frequency set by the filter bits.
- Mode 3 — FLL engaged internal (FEI)

  In this mode, the ICG's FLL is used to create frequencies that are programmable multiples of the internal reference clock.
  - FLL engaged internal unlocked is a transition state which occurs while the FLL is attempting to lock. The FLL DCO frequency is off target and the FLL is adjusting the DCO to match the target frequency.
  - FLL engaged internal locked is a state which occurs when the FLL detects that the DCO is locked to a multiple of the internal reference.
- Mode 4 — FLL bypassed external (FBE)

  In this mode, the ICG is configured to bypass the FLL and use an external clock as the clock source.
- Mode 5 — FLL engaged external (FEE)

  The ICG's FLL is used to generate frequencies that are programmable multiples of the external clock reference.
  - FLL engaged external unlocked is a transition state which occurs while the FLL is attempting to lock. The FLL DCO frequency is off target and the FLL is adjusting the DCO to match the target frequency.
  - FLL engaged external locked is a state which occurs when the FLL detects that the DCO is locked to a multiple of the internal reference.

7.2 Oscillator Pins

The oscillator pins are used to provide an external clock source for the MCU.

7.2.1 EXTAL— External Reference Clock / Oscillator Input

If upon the first write to ICGC1, either FEE mode or FBE mode is selected, this pin functions as either the external clock input or the input of the oscillator circuit as determined by REFS. If upon the first write to ICGC1, either FEI mode or SCM mode is selected, this pin is not used by the ICG.

7.2.2 XTAL— Oscillator Output

If upon the first write to ICGC1, either FEE mode or FBE mode is selected, this pin functions as the output of the oscillator circuit. If upon the first write to ICGC1, either FEI mode or SCM mode is selected, this

pin is not used by the ICG. The oscillator is capable of being configured to provide a higher amplitude output for improved noise immunity. This mode of operation is selected by HGO = 1.

7.2.3 External Clock Connections

If an external clock is used, then the pins are connected as shown in Figure 7-4.

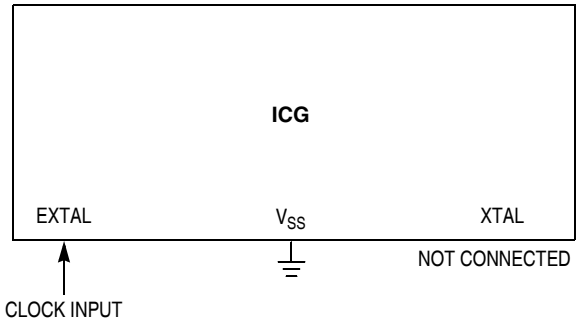

Figure 7-4. External Clock Connections

7.2.4 External Crystal/Resonator Connections

If an external crystal/resonator frequency reference is used, then the pins are connected as shown in Figure 7-5. Recommended component values are listed in Appendix A, "Electrical Characteristics."

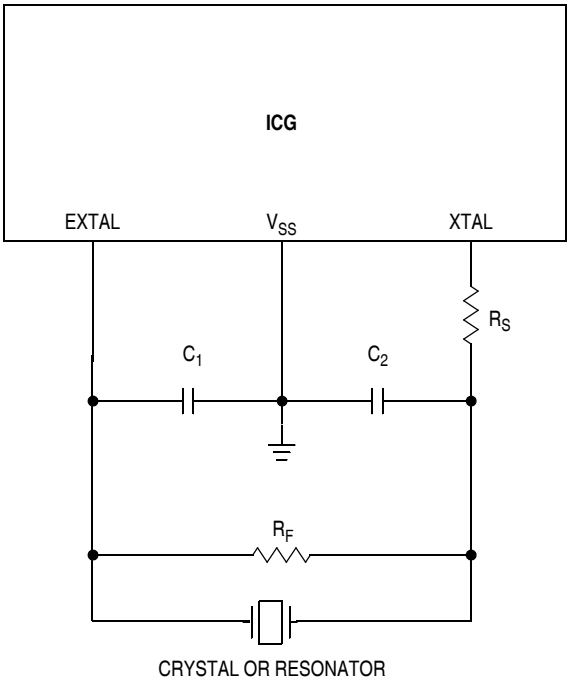

Figure 7-5. External Frequency Reference Connection

7.3 Functional Description

This section provides a functional description of each of the five operating modes of the ICG. Also covered are the loss of clock and loss of lock errors and requirements for entry into each mode. The ICG is very flexible, and in some configurations, it is possible to exceed certain clock specifications. When using the FLL, configure the ICG so that the frequency of ICGDCLK does not exceed its maximum value to ensure proper MCU operation.

7.3.1 Off Mode (Off)

Normally when the CPU enters stop mode, the ICG will cease all clock activity and is in the off state. However there are two cases to consider when clock activity continues while the CPU is in stop mode.

7.3.1.1 BDM Active

When the BDM is enabled (ENBDM = 1), the ICG continues activity as originally programmed. This allows access to memory and control registers via the BDC.

7.3.1.2 OSCSTEN Bit Set

When the oscillator is enabled in stop mode (OSCSTEN = 1), the individual clock generators are enabled but the clock feed to the rest of the MCU is turned off. This option is provided to avoid long oscillator startup times if necessary, or to run the RTI from the oscillator during stop3.

7.3.1.3 Stop/Off Mode Recovery

Upon the CPU exiting stop mode due to an interrupt, the previously set control bits are valid and the system clock feed resumes. If FEE is selected, the ICG will source the internal reference until the external clock is stable. If FBE is selected, the ICG will wait for the external clock to stabilize before enabling ICGOUT.

Upon the CPU exiting stop mode due to a reset, the previously set ICG control bits are ignored and the default reset values applied. Therefore the ICG will exit stop in SCM mode configured for an approximately 8 MHz DCO output (4 MHz bus clock) with trim value maintained. If using a crystal, 4096 clocks are detected prior to engaging ICGERCLK. This is incorporated in crystal start-up time.

7.3.2 Self-Clocked Mode (SCM)

Self-clocked mode (SCM) is the default mode of operation and is entered when any of the following conditions occur:

- After any reset.
- Exiting from off mode when CLKS does not equal 10. If CLKS = X1, the ICG enters this state temporarily until the DCO is stable (DCOS = 1).
- CLKS bits are written from X1 to 00.
- CLKS = 1X and ICGERCLK is not detected (both ERCS = 0 and LOCS = 1).

In this state, the FLL loop is open. The DCO is on, and the output clock signal ICGOUT frequency is given by $f_{ICGDCLK}$ / R. The ICGDCLK frequency can be varied from 8 MHz to 40 MHz by writing a new value into the filter registers (ICGFLTU and ICGFLTL). This is the only mode in which the filter registers can be written.

If this mode is entered due to a reset, $f_{ICGDCLK}$ will default to f_{Self_reset} which is nominally 8 MHz. If this mode is entered from FLL engaged internal, $f_{ICGDCLK}$ will maintain the previous frequency. If this mode is entered from FLL engaged external (either by programming CLKS or due to a loss of external reference clock), $f_{ICGDCLK}$ will maintain the previous frequency, but ICGOUT will double if the FLL was unlocked. If this mode is entered from off mode, $f_{ICGDCLK}$ will be equal to the frequency of ICGDCLK before entering off mode. If CLKS bits are set to 01 or 11 coming out of the Off state, the ICG enters this mode until ICGDCLK is stable as determined by the DCOS bit. Once ICGDCLK is considered stable, the ICG automatically closes the loop by switching to FLL engaged (internal or external) as selected by the CLKS bits.

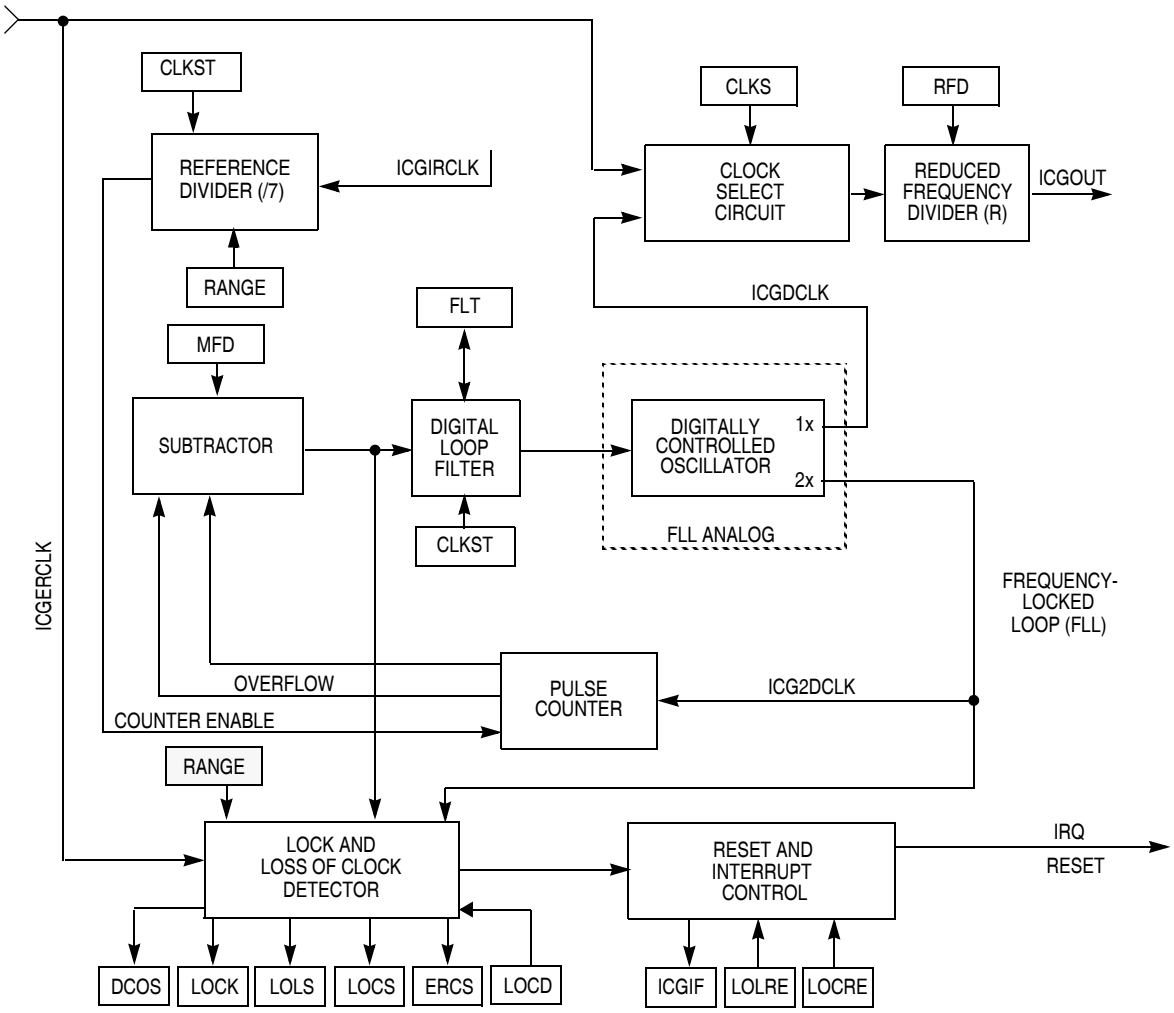

Figure 7-6. Detailed Frequency-Locked Loop Block Diagram

7.3.3 FLL Engaged, Internal Clock (FEI) Mode

FLL engaged internal (FEI) is entered when any of the following conditions occur:

- CLKS bits are written to 01
- The DCO clock stabilizes (DCOS = 1) while in SCM upon exiting the off state with CLKS = 01

In FLL engaged internal mode, the reference clock is derived from the internal reference clock ICGIRCLK, and the FLL loop will attempt to lock the ICGDCLK frequency to the desired value, as selected by the MFD bits.

7.3.3.1 FLL Engaged Internal Unlocked

FEI unlocked is a temporary state that is entered when FEI is entered and the count error (Δn) output from the subtractor is greater than the maximum n_{unlock} or less than the minimum n_{unlock}, as required by the lock detector to detect the unlock condition.

The ICG will remain in this state while the count error (Δn) is greater than the maximum n_{lock} or less than the minimum n_{lock}, as required by the lock detector to detect the lock condition.

In this state the output clock signal ICGOUT frequency is given by $f_{ICGDCLK}$ / R.

7.3.3.2 FLL Engaged Internal Locked

FLL engaged internal locked is entered from FEI unlocked when the count error (Δn), which comes from the subtractor, is less than n_{lock} (max) and greater than nlock (min) for a given number of samples, as required by the lock detector to detect the lock condition. The output clock signal ICGOUT frequency is given by $f_{ICGDCLK}$ / R. In FEI locked, the filter value is only updated once every four comparison cycles. The update made is an average of the error measurements taken in the four previous comparisons.

7.3.4 FLL Bypassed, External Clock (FBE) Mode

FLL bypassed external (FBE) is entered when any of the following conditions occur:

- From SCM when CLKS = 10 and ERCS is high
- When CLKS = 10, ERCS = 1 upon entering off mode, and off is then exited
- From FLL engaged external mode if a loss of DCO clock occurs and the external reference is still valid (both LOCS = 1 and ERCS = 1)

In this state, the DCO and IRG are off and the reference clock is derived from the external reference clock, ICGERCLK. The output clock signal ICGOUT frequency is given by $f_{ICGERCLK}$ / R. If an external clock source is used (REFS = 0), then the input frequency on the EXTAL pin can be anywhere in the range 0 MHz to 40 MHz. If a crystal or resonator is used (REFS = 1), then frequency range is either low for RANGE = 0 or high for RANGE = 1.

7.3.5 FLL Engaged, External Clock (FEE) Mode

The FLL engaged external (FEE) mode is entered when any of the following conditions occur:

- CLKS = 11 and ERCS and DCOS are both high.
- The DCO stabilizes (DCOS = 1) while in SCM upon exiting the off state with CLKS = 11.

In FEE mode, the reference clock is derived from the external reference clock ICGERCLK, and the FLL loop will attempt to lock the ICGDCLK frequency to the desired value, as selected by the MFD bits. To run in FEE mode, there must be a working 32 kHz–100 kHz or 2 MHz–10 MHz external clock source. The maximum external clock frequency is limited to 10 MHz in FEE mode to prevent over-clocking the DCO. The minimum multiplier for the FLL, from Table 7-7, is 4. Because 4 X 10 MHz is 40 MHz, which is the operational limit of the DCO, the reference clock cannot be any faster than 10 MHz.

7.3.5.1 FLL Engaged External Unlocked

FEE unlocked is entered when FEE is entered and the count error (Δn) output from the subtractor is greater than the maximum n_{unlock} or less than the minimum n_{unlock}, as required by the lock detector to detect the unlock condition.

The ICG will remain in this state while the count error (Δn) is greater than the maximum n_{lock} or less than the minimum n_{lock}, as required by the lock detector to detect the lock condition.

In this state, the pulse counter, subtractor, digital loop filter, and DCO form a closed loop and attempt to lock it according to their operational descriptions later in this section. Upon entering this state and until the FLL becomes locked, the output clock signal ICGOUT frequency is given by $f_{ICGDCLK}$ / (2×R). This extra divide by two prevents frequency overshoots during the initial locking process from exceeding chip-level maximum frequency specifications. As soon as the FLL has locked, if an unexpected loss of lock causes it to re-enter the unlocked state while the ICG remains in FEE mode, the output clock signal ICGOUT frequency is given by $f_{ICGDCLK}$ / R.

7.3.5.2 FLL Engaged External Locked

FEE locked is entered from FEE unlocked when the count error (Δn) is less than n_{lock} (max) and greater than n_{lock} (min) for a given number of samples, as required by the lock detector to detect the lock condition. The output clock signal ICGOUT frequency is given by $f_{ICGDCLK}$/R. In FLL engaged external locked, the filter value is only updated once every four comparison cycles. The update made is an average of the error measurements taken in the four previous comparisons.

7.3.6 FLL Lock and Loss-of-Lock Detection

To determine the FLL locked and loss-of-lock conditions, the pulse counter counts the pulses of the DCO for one comparison cycle (see Table 7-2 for explanation of a comparison cycle) and passes this number to the subtractor. The subtractor compares this value to the value in MFD and produces a count error, Δn. To achieve locked status, Δn must be between n_{lock} (min) and n_{lock} (max). As soon as the FLL has locked, Δn must stay between n_{unlock} (min) and n_{unlock} (max) to remain locked. If Δn goes outside this range unexpectedly, the LOLS status bit is set and remains set until acknowledged or until the MCU is reset. LOLS is cleared by reading ICGS1 then writing 1 to ICGIF (LOLRE = 0), or by a loss-of-lock induced reset (LOLRE = 1), or by any MCU reset.

If the ICG enters the off state due to stop mode when ENBDM = OSCSTEN = 0, the FLL loses locked status (LOCK is cleared), but LOLS remains unchanged because this is not an unexpected loss-of-lock condition. Though it would be unusual, if ENBDM is cleared to 0 while the MCU is in stop, the ICG enters

the off state. Because this is an unexpected stopping of clocks, LOLS will be set when the MCU wakes up from stop.

Expected loss of lock occurs when the MFD or CLKS bits are changed or in FEI mode only, when the TRIM bits are changed. In these cases, the LOCK bit will be cleared until the FLL regains lock, but the LOLS will not be set.

7.3.7 FLL Loss-of-Clock Detection

The reference clock and the DCO clock are monitored under different conditions (see Table 7-1). Provided the reference frequency is being monitored, ERCS = 1 indicates that the reference clock meets minimum frequency requirements. When the reference and/or DCO clock(s) are being monitored, if either one falls below a certain frequency, f_{LOR} and f_{LOD}, respectively, the LOCS status bit will be set to indicate the error. LOCS will remain set until it is cleared by software or until the MCU is reset. LOCS is cleared by reading ICGS1 then writing 1 to ICGIF (LOCRE = 0), or by a loss-of-clock induced reset (LOCRE = 1), or by any MCU reset.

If the ICG is in FEE, a loss of reference clock causes the ICG to enter SCM, and a loss of DCO clock causes the ICG to enter FBE mode. If the ICG is in FBE mode, a loss of reference clock will cause the ICG to enter SCM. In each case, the CLKST and CLKS bits will be automatically changed to reflect the new state.

A loss of clock will also cause a loss of lock when in FEE or FEI modes. Because the method of clearing the LOCS and LOLS bits is the same, this would only be an issue in the unlikely case that LOLRE = 1 and LOCRE = 0. In this case, the interrupt would be overridden by the reset for the loss of lock.

Table 7-1. Clock Monitoring (When LOCD = 0)

Mode	CLKS	REFST	ERCS	External Reference Clock Monitored?	DCO Clock Monitored?
Off	0X or 11	X	Forced Low	No	No
	10	0	Forced Low	No	No
	10	1	Real-Time[1]	Yes(1)	No
SCM (CLKST = 00)	0X	X	Forced Low	No	Yes[2]
	10	0	Forced High	No	Yes(2)
	10	1	Real-Time	Yes	Yes(2)
	11	X	Real-Time	Yes	Yes(2)
FEI (CLKST = 01)	0X	X	Forced Low	No	Yes
	11	X	Real-Time	Yes	Yes
FBE (CLKST = 10)	10	0	Forced High	No	No
	10	1	Real-Time	Yes	No
FEE (CLKST = 11)	11	X	Real-Time	Yes	Yes

1 If ENABLE is high (waiting for external crystal start-up after exiting stop).

2 DCO clock will not be monitored until DCOS = 1 upon entering SCM from off or FLL bypassed external mode.

7.3.8 Clock Mode Requirements

A clock mode is requested by writing to CLKS1:CLKS0 and the actual clock mode is indicated by CLKST1:CLKST0. Provided minimum conditions are met, the status shown in CLKST1:CLKST0 should be the same as the requested mode in CLKS1:CLKS0. Table 7-2 shows the relationship between CLKS, CLKST, and ICGOUT. It also shows the conditions for CLKS = CLKST or the reason CLKS ≠ CLKST.

NOTE

If a crystal will be used before the next reset, then be sure to set REFS = 1 and CLKS = 1x on the first write to the ICGC1 register. Failure to do so will result in "locking" REFS = 0, which will prevent the oscillator amplifier from being enabled until the next reset occurs.

Table 7-2. ICG State Table

Actual Mode (CLKST)	Desired Mode (CLKS)	Range	Reference Frequency ($f_{REFERENCE}$)	Comparison Cycle Time	ICGOUT	Conditions[1] for CLKS = CLKST	Reason CLKS1 = CLKST
Off (XX)	Off (XX)	X	0	—	0	—	—
	FBE (10)	X	0	—	0	—	ERCS = 0
SCM (00)	SCM (00)	X	$f_{ICGIRCLK}/7$[2]	$8/f_{ICGIRCLK}$	ICGDCLK/R	Not switching from FBE to SCM	—
	FEI (01)	0	$f_{ICGIRCLK}/7$(1)	$8/f_{ICGIRCLK}$	ICGDCLK/R	—	DCOS = 0
	FBE (10)	X	$f_{ICGIRCLK}/7$(1)	$8/f_{ICGIRCLK}$	ICGDCLK/R	—	ERCS = 0
	FEE (11)	X	$f_{ICGIRCLK}/7$(1)	$8/f_{ICGIRCLK}$	ICGDCLK/R	—	DCOS = 0 or ERCS = 0
FEI (01)	FEI (01)	0	$f_{ICGIRCLK}/7$	$8/f_{ICGIRCLK}$	ICGDCLK/R	DCOS = 1	—
	FEE (11)	X	$f_{ICGIRCLK}/7$	$8/f_{ICGIRCLK}$	ICGDCLK/R	—	ERCS = 0
FBE (10)	FBE (10)	X	0	—	ICGERCLK/R	ERCS = 1	—
	FEE (11)	X	0	—	ICGERCLK/R	—	LOCS = 1 & ERCS = 1
FEE (11)	FEE (11)	0	$f_{ICGERCLK}$	$2/f_{ICGERCLK}$	ICGDCLK/R[3]	ERCS = 1 and DCOS = 1	—
		1	$f_{ICGERCLK}$	$128/f_{ICGERCLK}$	ICGDCLK/R(2)	ERCS = 1 and DCOS = 1	—

1 CLKST will not update immediately after a write to CLKS. Several bus cycles are required before CLKST updates to the new value.

2 The reference frequency has no effect on ICGOUT in SCM, but the reference frequency is still used in making the comparisons that determine the DCOS bit.

3 After initial LOCK; will be ICGDCLK/2R during initial locking process and while FLL is re-locking after the MFD bits are changed.

7.3.9 Fixed Frequency Clock

The ICG provides a fixed frequency clock output, XCLK, for use by on-chip peripherals. This output is equal to the internal bus clock, BUSCLK, in FBE mode. In FEE mode, XCLK is equal to ICGERCLK ÷ 2 when the following conditions are met:

- $(P \times N) \div R \geq 4$ where P is determined by RANGE (see Table 7-4), N and R are determined by MFD and RFD, respectively (see Table 7-5).
- LOCK = 1.

If the above conditions are not true, then XCLK is equal to BUSCLK.

When the ICG is in either FEI or SCM mode, XCLK is turned off. Any peripherals which can use XCLK as a clock source must not do so when the ICG is in FEI or SCM mode.

7.3.10 High Gain Oscillator

The oscillator has the option of running in a high gain oscillator (HGO) mode, which improves the oscillator's resistance to EMC noise when running in FBE or FEE modes. This option is selected by writing a 1 to the HGO bit in the ICGC1 register. HGO is used with both the high and low range oscillators but is only valid when REFS = 1 in the ICGC1 register. When HGO = 0, the standard low-power oscillator is selected.

If the high gain option is to be switched after the initial write to the ICGC1 register, then the ICG should first be changed to SCM or FEI mode to stop the external oscillator. Then the HGO bit can be modified and FEE or FBE mode can be re-selected in the same write to ICGC1. The oscillator will go through the standard start-up delay before the ICG switches to the external oscillator

7.4 Initialization/Application Information

7.4.1 Introduction

This section is intended to give some basic direction on which configuration a user would want to select when initializing the ICG. For some applications, the serial communication link may dictate the accuracy of the clock reference. For other applications, lowest power consumption may be the chief clock consideration. Still others may have lowest cost as the primary goal. The ICG allows great flexibility in choosing which is best for any application.

Table 7-3. ICG Configuration Consideration

	Clock Reference Source = Internal	Clock Reference Source = External
FLL Engaged	**FEI** 4 MHz < f_{Bus} < 20 MHz. Medium power (will be less than FEE if oscillator range = high) Medium clock accuracy (After IRG is trimmed) **Lowest system cost** (no external components required) IRG is on. DCO is on. [1]	**FEE** 4 MHz < f_{Bus} < 20 MHz Medium power (will be less than FEI if oscillator range = low) Good clock accuracy Medium/High system cost (crystal, resonator or external clock source required) IRG is off. DCO is on.
FLL Bypassed	**SCM** This mode is mainly provided for quick and reliable system startup. 3 MHz < f_{Bus} < 5 MHz (default). 3 MHz < f_{Bus} < 20 MHz (via filter bits). Medium power Poor accuracy. IRG is off. DCO is on and open loop.	**FBE** f_{Bus} range <= 8 MHz when crystal or resonator is used. **Lowest power** Highest clock accuracy Medium/High system cost (Crystal, resonator or external clock source required) IRG is off. DCO is off.

[1] The IRG typically consumes 100 μA. The FLL and DCO typically consumes 0.5 to 2.5 mA, depending upon output frequency. For minimum power consumption and minimum jitter, choose N and R to be as small as possible.

The following sections contain initialization examples for various configurations.

NOTE

Hexadecimal values designated by a preceding $, binary values designated by a preceding %, and decimal values have no preceding character.

Important configuration information is repeated here for reference.

Table 7-4. ICGOUT Frequency Calculation Options

Clock Scheme	f_{ICGOUT}[1]	P	Note
SCM — self-clocked mode (FLL bypassed internal)	$f_{ICGDCLK}$ / R	NA	Typical f_{ICGOUT} = 8 MHz out of reset
FBE — FLL bypassed external	f_{ext} / R	NA	
FEI — FLL engaged internal	(f_{IRG} / 7)* 64*N / R	64	Typical f_{IRG} = 243 kHz
FEE — FLL engaged external	f_{ext} * P * N / R	Range = 0 ; P = 64 Range = 1; P = 1	

[1] Ensure that $f_{ICGDCLK}$, which is equal to f_{ICGOUT} * R, does not exceed $f_{ICGDCLKmax}$.

Table 7-5. MFD and RFD Decode Table

MFD Value	Multiplication Factor (N)
000	4
001	6
010	8
011	10
100	12
101	14
110	16
111	18

RFD	Division Factor (R)
000	÷1
001	÷2
010	÷4
011	÷8
100	÷16
101	÷32
110	÷64
111	÷128

Register	Bit 7	6	5	4	3	2	1	Bit 0
ICGC1	HGO	RANGE	REFS	CLKS		OSCSTEN	LOCD	0
ICGC2	LOLRE	MFD			LOCRE	RFD		
ICGS1	CLKST		REFST	LOLS	LOCK	LOCS	ERCS	ICGIF
ICGS2	0	0	0	0	0	0	0	DCOS
ICGFLTU	0	0	0	0	FLT			
ICGFLTL	FLT							
ICGTRM	TRIM							

= Unimplemented or Reserved

Figure 7-7. ICG Register Set

7.4.2 Example #1: External Crystal = 32 kHz, Bus Frequency = 4.19 MHz

In this example, the FLL will be used (in FEE mode) to multiply the external 32 kHz oscillator up to 8.38 MHz to achieve 4.19 MHz bus frequency.

After the MCU is released from reset, the ICG is in self-clocked mode (SCM) and supplies approximately 8 MHz on ICGOUT, which corresponds to a 4 MHz bus frequency (f_{Bus}).

The clock scheme will be FLL engaged, external (FEE). So

$$f_{ICGOUT} = f_{ext} * P * N / R \; ; \; P = 64, \; f_{ext} = 32 \text{ kHz} \qquad \textit{Eqn. 7-1}$$

Solving for N / R gives:

$$N / R = 8.38 \text{ MHz} / (32 \text{ kHz} * 64) = 4 \; ; \text{ we can choose } N = 4 \text{ and } R = 1 \qquad \textit{Eqn. 7-2}$$

The values needed in each register to set up the desired operation are:

ICGC1 = $38 (%00111000)

Bit 7	HGO	0	Configures oscillator for low-power operation
Bit 6	RANGE	0	Configures oscillator for low-frequency range; FLL prescale factor is 64
Bit 5	REFS	1	Oscillator using crystal or resonator is requested
Bits 4:3	CLKS	11	FLL engaged, external reference clock mode
Bit 2	OSCSTEN	0	Oscillator disabled in stop modes
Bit 1	LOCD	0	Loss-of-clock detection enabled
Bit 0		0	Unimplemented or reserved, always reads zero

ICGC2 = $00 (%00000000)

Bit 7	LOLRE	0	Generates an interrupt request on loss of lock
Bits 6:4	MFD	000	Sets the MFD multiplication factor to 4
Bit 3	LOCRE	0	Generates an interrupt request on loss of clock
Bits 2:0	RFD	000	Sets the RFD division factor to ÷1

ICGS1 = $xx

This is read only except for clearing interrupt flag

ICGS2 = $xx

This is read only; should read DCOS = 1 before performing any time critical tasks

ICGFLTLU/L = $xx

Only needed in self-clocked mode; FLT will be adjusted by loop to give 8.38 MHz DCO clock

Bits 15:12	unused	0000
Bits 11:0	FLT	No need for user initialization

ICGTRM = $xx

Bits 7:0	TRIM	Only need to write when trimming internal oscillator; not used when external crystal is clock source

Figure 7-8 shows flow charts for three conditions requiring ICG initialization.

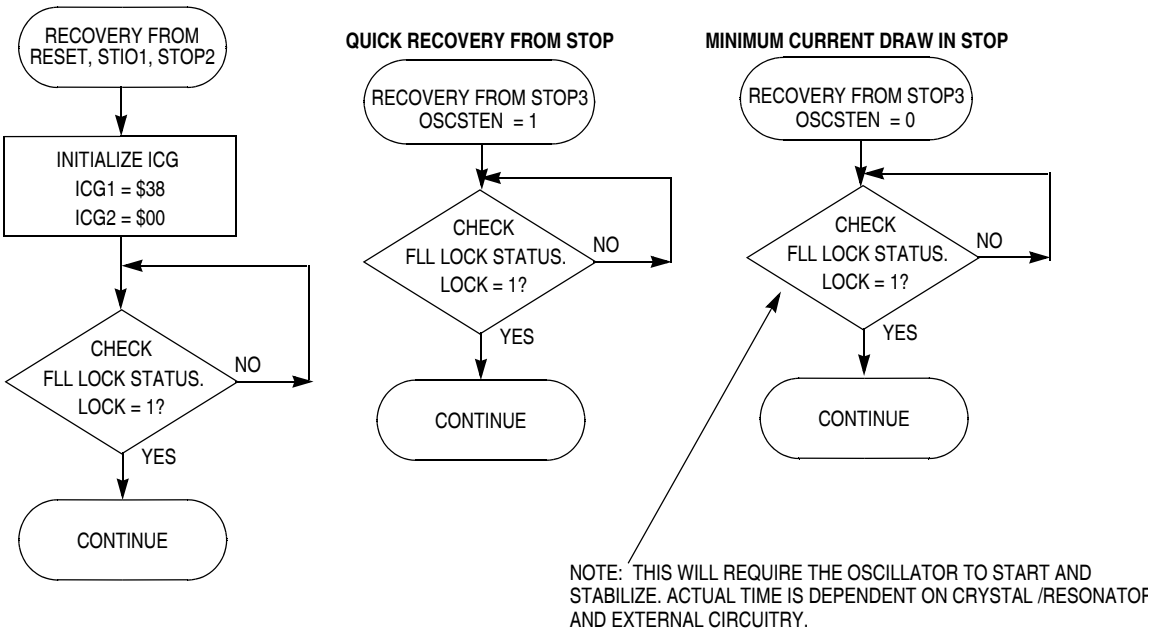

Figure 7-8. ICG Initialization for FEE in Example #1

7.4.3 Example #2: External Crystal = 4 MHz, Bus Frequency = 20 MHz

In this example, the FLL will be used (in FEE mode) to multiply the external 4 MHz oscillator up to 40-MHz to achieve 20 MHz bus frequency.

After the MCU is released from reset, the ICG is in self-clocked mode (SCM) and supplies approximately 8 MHz on ICGOUT which corresponds to a 4 MHz bus frequency (f_{Bus}).

During reset initialization software, the clock scheme will be set to FLL engaged, external (FEE). So

$$f_{ICGOUT} = f_{ext} * P * N / R \; ; \; P = 1, f_{ext} = 4.00 \text{ MHz} \qquad \textit{Eqn. 7-3}$$

Solving for N / R gives:

$$N / R = 40 \text{ MHz} /(4 \text{ MHz} * 1) = 10 \; ; \text{ We can choose } N = 10 \text{ and } R = 1 \qquad \textit{Eqn. 7-4}$$

The values needed in each register to set up the desired operation are:

ICGC1 = $78 (%01111000)

Bit 7	HGO	0	Configures oscillator for low-power operation
Bit 6	RANGE	1	Configures oscillator for high-frequency range; FLL prescale factor is 1
Bit 5	REFS	1	Requests an oscillator
Bits 4:3	CLKS	11	FLL engaged, external reference clock mode
Bit 2	OSCSTEN	0	Disables the oscillator in stop modes
Bit 1	LOCD	0	Loss-of-clock detection enabled
Bit 0		0	Unimplemented or reserved, always reads zero

ICGC2 = $30 (%00110000)

Bit 7	LOLRE	0	Generates an interrupt request on loss of lock
Bit 6:4	MFD	011	Sets the MFD multiplication factor to 10
Bit 3	LOCRE	0	Generates an interrupt request on loss of clock
Bit 2:0	RFD	000	Sets the RFD division factor to ÷1

ICGS1 = $xx

This is read only except for clearing interrupt flag

ICGS2 = $xx

This is read only. Should read DCOS before performing any time critical tasks

ICGFLTLU/L = $xx

Not used in this example

ICGTRM

Not used in this example

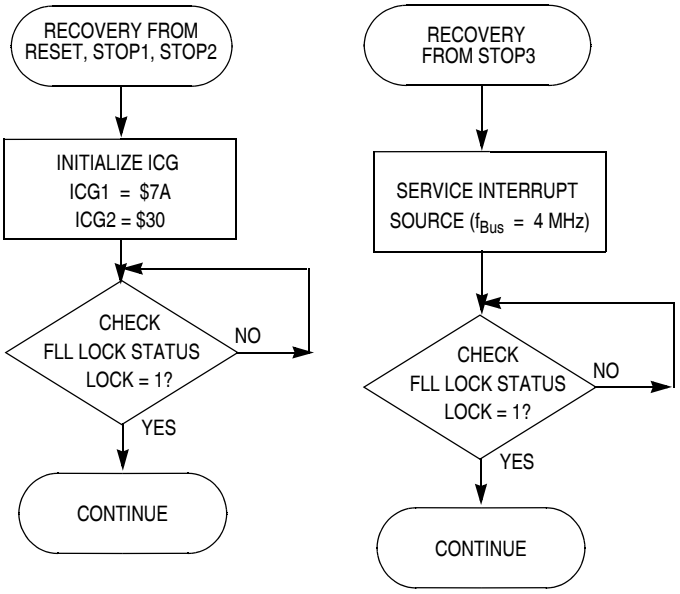

Figure 7-9. ICG Initialization and Stop Recovery for Example #2

7.4.4 Example #3: No External Crystal Connection, 5.4 MHz Bus Frequency

In this example, the FLL will be used (in FEI mode) to multiply the internal 243 kHz (approximate) reference clock up to 10.8 MHz to achieve 5.4 MHz bus frequency. This system will also use the trim function to fine tune the frequency based on an external reference signal.

After the MCU is released from reset, the ICG is in self-clocked mode (SCM) and supplies approximately 8 MHz on ICGOUT which corresponds to a 4 MHz bus frequency (f_{Bus}).

The clock scheme will be FLL engaged, internal (FEI). So

$$f_{ICGOUT} = (f_{IRG} / 7) * P * N / R \; ; \; P = 64, \; f_{IRG} = 243 \text{ kHz} \qquad \textit{Eqn. 7-5}$$

Solving for N / R gives:

$$N / R = 10.8 \text{ MHz} /(243/7 \text{ kHz} * 64) = 4.86 \; ; \; \text{We can choose } N = 10 \text{ and } R = 2. \qquad \textit{Eqn. 7-6}$$

A trim procedure will be required to hone the frequency to exactly 5.4 MHz. An example of the trim procedure is shown in example #4.

The values needed in each register to set up the desired operation are:

ICGC1 = $28 (%00101000)

Bit 7	HGO	0	Configures oscillator for low-power operation
Bit 6	RANGE	0	Configures oscillator for low-frequency range; FLL prescale factor is 64
Bit 5	REFS	1	Oscillator using crystal or resonator requested (bit is really a don't care)
Bits 4:3	CLKS	01	FLL engaged, internal reference clock mode
Bit 2	OSCSTEN	0	Disables the oscillator in stop modes
Bit 1	LOCD	0	Loss-of-clock detection enabled
Bit 0		0	Unimplemented or reserved, always reads zero

ICGC2 = $31 (%00110001)

Bit 7	LOLRE	0	Generates an interrupt request on loss of lock
Bit 6:4	MFD	011	Sets the MFD multiplication factor to 10
Bit 3	LOCRE	0	Generates an interrupt request on loss of clock
Bit 2:0	RFD	001	Sets the RFD division factor to ÷2

ICGS1 = $xx

This is read only except for clearing interrupt flag

ICGS2 = $xx

This is read only; good idea to read this before performing time critical operations

ICGFLTLU/L = $xx

Not used in this example

ICGTRM = $xx

Bit 7:0	TRIM	Only need to write when trimming internal oscillator; done in separate operation (see example #4)

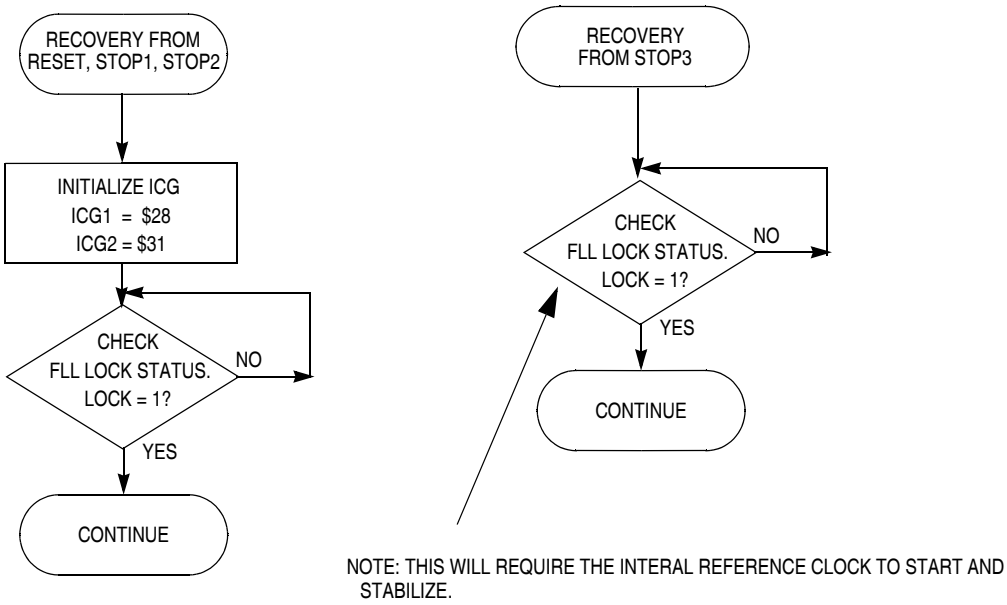

Figure 7-10. ICG Initialization and Stop Recovery for Example #3

7.4.5 Example #4: Internal Clock Generator Trim

The internally generated clock source is guaranteed to have a period ± 25% of the nominal value. In some case this may be sufficient accuracy. For other applications that require a tight frequency tolerance, a trimming procedure is provided that will allow a very accurate source. This section outlines one example of trimming the internal oscillator. Many other possible trimming procedures are valid and can be used.

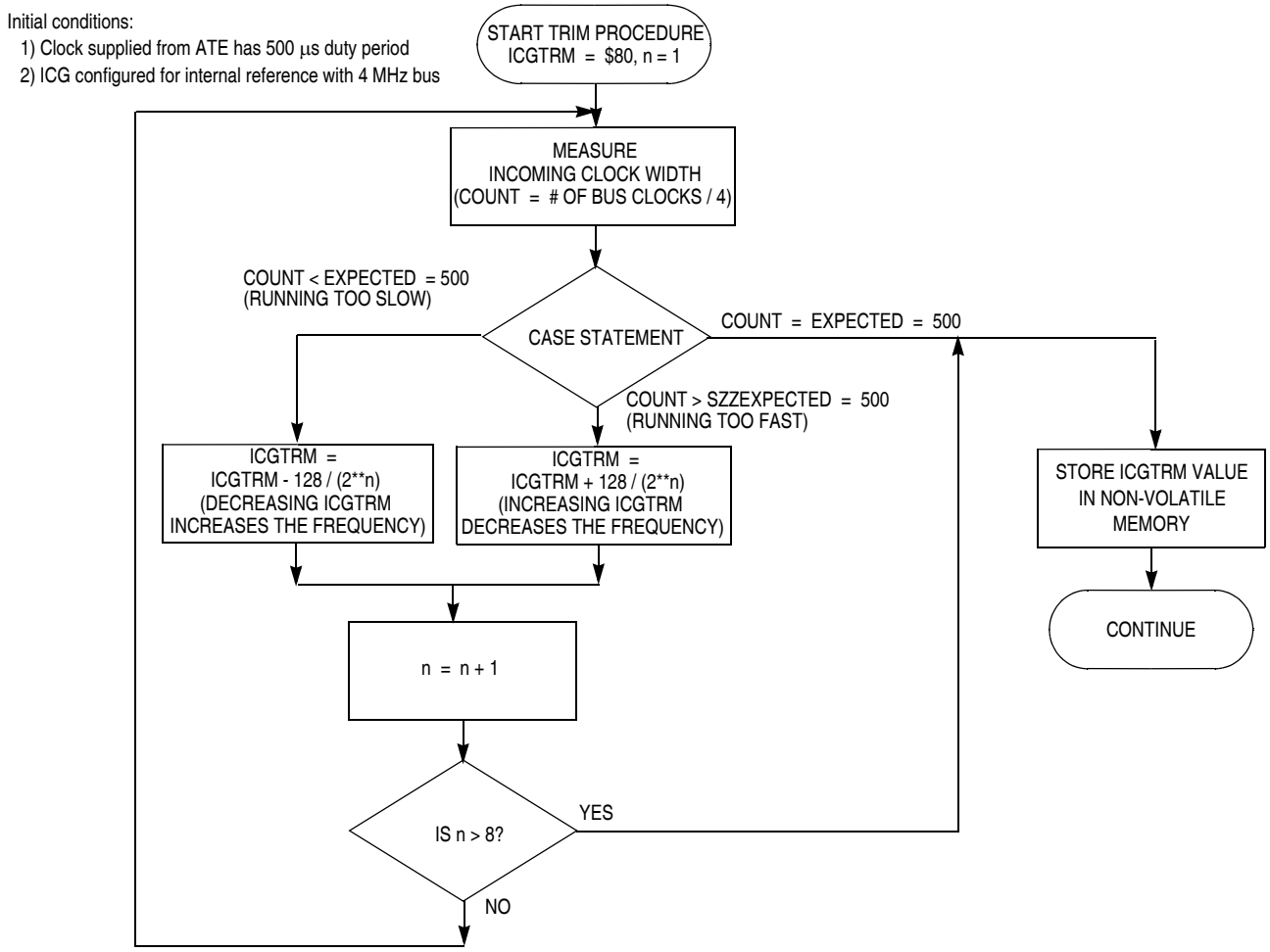

Figure 7-11. Trim Procedure

In this particular case, the MCU has been attached to a PCB and the entire assembly is undergoing final test with automated test equipment. A separate signal or message is provided to the MCU operating under user provided software control. The MCU initiates a trim procedure as outlined in Figure 7-11 while the tester supplies a precision reference signal.

If the intended bus frequency is near the maximum allowed for the device, it is recommended to trim using a reduction divisor (R) twice the final value. Once the trim procedure is complete, the reduction divisor can be restored. This will prevent accidental overshoot of the maximum clock frequency.

7.5 ICG Registers and Control Bits

Refer to the direct-page register summary in Chapter 4, “Memory” of this data sheet for the absolute address assignments for all ICG registers. This section refers to registers and control bits only by their names. A Freescale-provided equate or header file is used to translate these names into the appropriate absolute addresses.

7.5.1 ICG Control Register 1 (ICGC1)

	7	6	5	4	3	2	1	0
R W	HGO	RANGE	REFS	CLKS		OSCSTEN	LOCD	0
Reset	0	1	0	0	0	1	0	0

= Unimplemented or Reserved

Figure 7-12. ICG Control Register 1 (ICGC1)

Table 7-6. ICGC1 Field Descriptions

Field	Description
7 HGO	**High Gain Oscillator Select** — The HGO bit is used to select between low-power operation and high-amplitude operation. 0 Oscillator configured for low power operation. 1 Oscillator configured for high amplitude operation.
6 RANGE	**Frequency Range Select** — The RANGE bit controls the oscillator, reference divider, and FLL loop prescaler multiplication factor (P). It selects one of two reference frequency ranges for the ICG. The RANGE bit is write-once after a reset. The RANGE bit only has an effect in FLL engaged external and FLL bypassed external modes. 0 Oscillator configured for low frequency range. FLL loop prescale factor P is 64. 1 Oscillator configured for high frequency range. FLL loop prescale factor P is 1.
5 REFS	**External Reference Select** — The REFS bit controls the external reference clock source for ICGERCLK. The REFS bit is write-once after a reset. 0 External clock requested. 1 Oscillator using crystal or resonator requested.
4:3 CLKS	**Clock Mode Select** — The CLKS bits control the clock mode. If FLL bypassed external is requested, it will not be selected until ERCS = 1. If the ICG enters off mode, the CLKS bits will remain unchanged. Writes to the CLKS bits will not take effect if a previous write is not complete. The CLKS bits are writable at any time, unless the first write after a reset was CLKS = 0X, the CLKS bits cannot be written to 1X until after the next reset (because the EXTAL pin was not reserved). 00 Self-clocked 01 FLL engaged, internal reference 10 FLL bypassed, external reference 11 FLL engaged, external reference
2 OSCSTEN	**Enable Oscillator in Off Mode** — The OSCTEN bit controls whether or not the oscillator circuit remains enabled when the ICG enters off mode. 0 Oscillator disabled when ICG is in off mode unless ENABLE is high, CLKS = 10, and REFST = 1. 1 Oscillator enabled when ICG is in off mode, CLKS = 1X and REFST = 1.
1 LOCD	**Loss of Clock Disable** 0 Loss of clock detection enabled. 1 Loss of clock detection disabled.

7.5.2 ICG Control Register 2 (ICGC2)

	7	6	5	4	3	2	1	0
R W	LOLRE	MFD			LOCRE	RFD		
Reset	0	0	0	0	0	0	0	0

Figure 7-13. ICG Control Register 2 (ICGC2)

Table 7-7. ICGC2 Field Descriptions

Field	Description
7 LOLRE	**Loss of Lock Reset Enable** — The LOLRE bit determines what type of request is made by the ICG following a loss of lock indication. The LOLRE bit only has an effect when LOLS is set. 0 Generate an interrupt request on loss of lock. 1 Generate a reset request on loss of lock.
6:4 MFD	**Multiplication Factor** — The MFD bits control the programmable multiplication factor in the FLL loop. The value specified by the MFD bits establishes the multiplication factor (N) applied to the reference frequency. Writes to the MFD bits will not take effect if a previous write is not complete. Select a low enough value for N such that $f_{ICGDCLK}$ does not exceed its maximum specified rating. 000 Multiplication Factor (N) = 4 001 Multiplication Factor (N) = 6 010 Multiplication Factor (N) = 8 011 Multiplication Factor (N) = 10 100 Multiplication Factor (N) = 12 101 Multiplication Factor (N) = 14 110 Multiplication Factor (N) = 16 111 Multiplication Factor (N) = 18
3 LOCRE	**Loss of Clock Reset Enable** — The LOCRE bit determines how the system handles a loss of clock condition. 0 Generate an interrupt request on loss of clock. 1 Generate a reset request on loss of clock.
2:0 RFD	**Reduced Frequency Divider** — The RFD bits control the value of the divider following the clock select circuitry. The value specified by the RFD bits establishes the division factor (R) applied to the selected output clock source. Writes to the RFD bits will not take effect if a previous write is not complete. 000 Division Factor (R) = 1 001 Division Factor (R) = 2 010 Division Factor (R) = 4 011 Division Factor (R) = 8 100 Division Factor (R) = 16 101 Division Factor (R) = 32 110 Division Factor (R) = 64 111 Division Factor (R) = 128

7.5.3 ICG Status Register 1 (ICGS1)

	7	6	5	4	3	2	1	0
R	CLKST		REFST	LOLS	LOCK	LOCS	ERCS	ICGIF
W								1
Reset	0	0	0	0	0	0	0	0

= Unimplemented or Reserved

Figure 7-14. ICG Status Register 1 (ICGS1)

Table 7-8. ICGS1 Field Descriptions

Field	Description
7:6 CLKST	**Clock Mode Status** — The CLKST bits indicate the current clock mode. The CLKST bits don't update immediately after a write to the CLKS bits due to internal synchronization between clock domains. 00 Self-clocked 01 FLL engaged, internal reference 10 FLL bypassed, external reference 11 FLL engaged, external reference
5 REFST	**Reference Clock Status** — The REFST bit indicates which clock reference is currently selected by the Reference Select circuit. 0 External Clock selected. 1 Crystal/Resonator selected.
4 LOLS	**FLL Loss of Lock Status** — The LOLS bit is an indication of FLL-lock status. If LOLS is set, it remains set until cleared by clearing the ICGIF flag or an MCU reset. 0 FLL has not unexpectedly lost lock since LOLS was last cleared. 1 FLL has unexpectedly lost lock since LOLS was last cleared, LOLRE determines action taken.
3 LOCK	**FLL Lock Status** — The LOCK bit indicates whether the FLL has acquired lock. The LOCK bit is cleared in off, self-clocked, and FLL bypassed modes. 0 FLL is currently unlocked. 1 FLL is currently locked.
2 LOCS	**Loss Of Clock Status** — The LOCS bit is an indication of ICG loss-of-clock status. If LOCS is set, it remains set until cleared by clearing the ICGIF flag or an MCU reset. 0 ICG has not lost clock since LOCS was last cleared. 1 ICG has lost clock since LOCS was last cleared, LOCRE determines action taken.
1 ERCS	**External Reference Clock Status** — The ERCS bit is an indication of whether or not the external reference clock (ICGERCLK) meets the minimum frequency requirement. 0 External reference clock is not stable, frequency requirement is not met. 1 External reference clock is stable, frequency requirement is met.
0 ICGIF	**ICG Interrupt Flag** — The ICGIF read/write flag is set when an ICG interrupt request is pending. It is cleared by a reset or by reading the ICG status register when ICGIF is set and then writing a 1 to ICGIF. If another ICG interrupt occurs before the clearing sequence is complete, the sequence is reset so ICGIF would remain set after the clear sequence was completed for the earlier interrupt. Writing a 0 to ICGIF has no effect. 0 No ICG interrupt request is pending. 1 An ICG interrupt request is pending.

7.5.4 ICG Status Register 2 (ICGS2)

	7	6	5	4	3	2	1	0
R	0	0	0	0	0	0	0	DCOS
W								
Reset	0	0	0	0	0	0	0	0

= Unimplemented or Reserved

Figure 7-15. ICG Status Register 2 (ICGS2)

Table 7-9. ICGS2 Field Descriptions

Field	Description
0 DCOS	**DCO Clock Stable** — The DCOS bit is set when the DCO clock (ICG2DCLK) is stable, meaning the count error has not changed by more than n_{unlock} for two consecutive samples and the DCO clock is not static. This bit is used when exiting off state if CLKS = X1 to determine when to switch to the requested clock mode. It is also used in self-clocked mode to determine when to start monitoring the DCO clock. This bit is cleared upon entering the off state. 0 DCO clock is unstable. 1 DCO clock is stable.

7.5.5 ICG Filter Registers (ICGFLTU, ICGFLTL)

The filter registers show the filter value (FLT).

	7	6	5	4	3	2	1	0
R	0	0	0	0	FLT			
W								
Reset	0	0	0	0	0	0	0	0

= Unimplemented or Reserved

Figure 7-16. ICG Upper Filter Register (ICGFLTU)

Table 7-10. ICGFLTU Field Descriptions

Field	Description
3:0 FLT	**Filter Value** — The FLT bits indicate the current filter value, which controls the DCO frequency. The FLT bits are read only except when the CLKS bits are programmed to self-clocked mode (CLKS = 00). In self-clocked mode, any write to ICGFLTU updates the current 12-bit filter value. Writes to the ICGFLTU register will not affect FLT if a previous latch sequence is not complete.

	7	6	5	4	3	2	1	0
R W	FLT							
Reset	1	1	0	0	0	0	0	0

= Unimplemented or Reserved

Figure 7-17. ICG Upper Filter Register (ICGFLTL)

Table 7-11. ICGFLTL Field Descriptions

Field	Description
7:0 FLT	**Filter Value** — The FLT bits indicate the current filter value, which controls the DCO frequency. The FLT bits are read only except when the CLKS bits are programmed to self-clocked mode (CLKS = 00). In self-clocked mode, any write to ICGFLTU updates the current 12-bit filter value. Writes to the ICGFLTU register will not affect FLT if a previous latch sequence is not complete.

7.5.6 ICG Trim Register (ICGTRM)

	7	6	5	4	3	2	1	0
R W	TRIM							
POR:	1	0	0	0	0	0	0	0
Reset:	u	u	u	u	u	u	u	u

= Unimplemented or Reserved u = Unaffected by MCU reset

Figure 7-18. ICG Trim Register (ICGTRM)

Table 7-12. ICGTRM Field Descriptions

Field	Description
7:0 TRIM	**ICG Trim Setting** — The TRIM bits control the internal reference generator frequency. They allow a ± 25% adjustment of the nominal (POR) period. The bit's effect on period is binary weighted (i.e., bit 1 will adjust twice as much as changing bit 0). Increasing the binary value in TRIM will increase the period and decreasing the value will decrease the period.

Chapter 8
Central Processor Unit (S08CPUV2)

8.1 Introduction

This section provides summary information about the registers, addressing modes, and instruction set of the CPU of the HCS08 Family. For a more detailed discussion, refer to the *HCS08 Family Reference Manual, volume 1,* Freescale Semiconductor document order number HCS08RMV1/D.

The HCS08 CPU is fully source- and object-code-compatible with the M68HC08 CPU. Several instructions and enhanced addressing modes were added to improve C compiler efficiency and to support a new background debug system which replaces the monitor mode of earlier M68HC08 microcontrollers (MCU).

8.1.1 Features

Features of the HCS08 CPU include:

- Object code fully upward-compatible with M68HC05 and M68HC08 Families
- All registers and memory are mapped to a single 64-Kbyte address space
- 16-bit stack pointer (any size stack anywhere in 64-Kbyte address space)
- 16-bit index register (H:X) with powerful indexed addressing modes
- 8-bit accumulator (A)
- Many instructions treat X as a second general-purpose 8-bit register
- Seven addressing modes:
  - Inherent — Operands in internal registers
  - Relative — 8-bit signed offset to branch destination
  - Immediate — Operand in next object code byte(s)
  - Direct — Operand in memory at 0x0000–0x00FF
  - Extended — Operand anywhere in 64-Kbyte address space
  - Indexed relative to H:X — Five submodes including auto increment
  - Indexed relative to SP — Improves C efficiency dramatically
- Memory-to-memory data move instructions with four address mode combinations
- Overflow, half-carry, negative, zero, and carry condition codes support conditional branching on the results of signed, unsigned, and binary-coded decimal (BCD) operations
- Efficient bit manipulation instructions
- Fast 8-bit by 8-bit multiply and 16-bit by 8-bit divide instructions
- STOP and WAIT instructions to invoke low-power operating modes

8.2 Programmer's Model and CPU Registers

Figure 8-1 shows the five CPU registers. CPU registers are not part of the memory map.

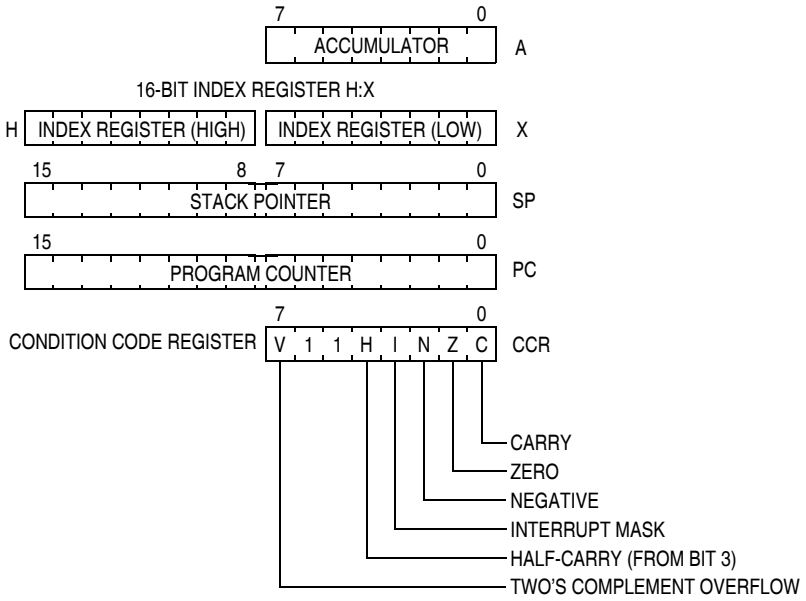

Figure 8-1. CPU Registers

8.2.1 Accumulator (A)

The A accumulator is a general-purpose 8-bit register. One operand input to the arithmetic logic unit (ALU) is connected to the accumulator and the ALU results are often stored into the A accumulator after arithmetic and logical operations. The accumulator can be loaded from memory using various addressing modes to specify the address where the loaded data comes from, or the contents of A can be stored to memory using various addressing modes to specify the address where data from A will be stored.

Reset has no effect on the contents of the A accumulator.

8.2.2 Index Register (H:X)

This 16-bit register is actually two separate 8-bit registers (H and X), which often work together as a 16-bit address pointer where H holds the upper byte of an address and X holds the lower byte of the address. All indexed addressing mode instructions use the full 16-bit value in H:X as an index reference pointer; however, for compatibility with the earlier M68HC05 Family, some instructions operate only on the low-order 8-bit half (X).

Many instructions treat X as a second general-purpose 8-bit register that can be used to hold 8-bit data values. X can be cleared, incremented, decremented, complemented, negated, shifted, or rotated. Transfer instructions allow data to be transferred from A or transferred to A where arithmetic and logical operations can then be performed.

For compatibility with the earlier M68HC05 Family, H is forced to 0x00 during reset. Reset has no effect on the contents of X.

8.2.3 Stack Pointer (SP)

This 16-bit address pointer register points at the next available location on the automatic last-in-first-out (LIFO) stack. The stack may be located anywhere in the 64-Kbyte address space that has RAM and can be any size up to the amount of available RAM. The stack is used to automatically save the return address for subroutine calls, the return address and CPU registers during interrupts, and for local variables. The AIS (add immediate to stack pointer) instruction adds an 8-bit signed immediate value to SP. This is most often used to allocate or deallocate space for local variables on the stack.

SP is forced to 0x00FF at reset for compatibility with the earlier M68HC05 Family. HCS08 programs normally change the value in SP to the address of the last location (highest address) in on-chip RAM during reset initialization to free up direct page RAM (from the end of the on-chip registers to 0x00FF).

The RSP (reset stack pointer) instruction was included for compatibility with the M68HC05 Family and is seldom used in new HCS08 programs because it only affects the low-order half of the stack pointer.

8.2.4 Program Counter (PC)

The program counter is a 16-bit register that contains the address of the next instruction or operand to be fetched.

During normal program execution, the program counter automatically increments to the next sequential memory location every time an instruction or operand is fetched. Jump, branch, interrupt, and return operations load the program counter with an address other than that of the next sequential location. This is called a change-of-flow.

During reset, the program counter is loaded with the reset vector that is located at 0xFFFE and 0xFFFF. The vector stored there is the address of the first instruction that will be executed after exiting the reset state.

8.2.5 Condition Code Register (CCR)

The 8-bit condition code register contains the interrupt mask (I) and five flags that indicate the results of the instruction just executed. Bits 6 and 5 are set permanently to 1. The following paragraphs describe the functions of the condition code bits in general terms. For a more detailed explanation of how each instruction sets the CCR bits, refer to the *HCS08 Family Reference Manual, volume 1,* Freescale Semiconductor document order number HCS08RMv1.

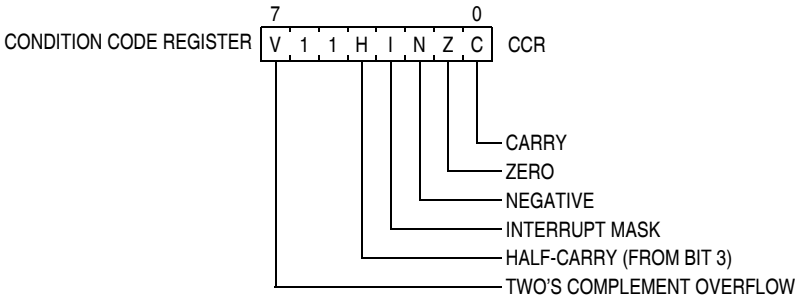

Figure 8-2. Condition Code Register

Table 8-1. CCR Register Field Descriptions

Field	Description
7 V	**Two's Complement Overflow Flag** — The CPU sets the overflow flag when a two's complement overflow occurs. The signed branch instructions BGT, BGE, BLE, and BLT use the overflow flag. 0 No overflow 1 Overflow
4 H	**Half-Carry Flag** — The CPU sets the half-carry flag when a carry occurs between accumulator bits 3 and 4 during an add-without-carry (ADD) or add-with-carry (ADC) operation. The half-carry flag is required for binary-coded decimal (BCD) arithmetic operations. The DAA instruction uses the states of the H and C condition code bits to automatically add a correction value to the result from a previous ADD or ADC on BCD operands to correct the result to a valid BCD value. 0 No carry between bits 3 and 4 1 Carry between bits 3 and 4
3 I	**Interrupt Mask Bit** — When the interrupt mask is set, all maskable CPU interrupts are disabled. CPU interrupts are enabled when the interrupt mask is cleared. When a CPU interrupt occurs, the interrupt mask is set automatically after the CPU registers are saved on the stack, but before the first instruction of the interrupt service routine is executed. Interrupts are not recognized at the instruction boundary after any instruction that clears I (CLI or TAP). This ensures that the next instruction after a CLI or TAP will always be executed without the possibility of an intervening interrupt, provided I was set. 0 Interrupts enabled 1 Interrupts disabled
2 N	**Negative Flag** — The CPU sets the negative flag when an arithmetic operation, logic operation, or data manipulation produces a negative result, setting bit 7 of the result. Simply loading or storing an 8-bit or 16-bit value causes N to be set if the most significant bit of the loaded or stored value was 1. 0 Non-negative result 1 Negative result
1 Z	**Zero Flag** — The CPU sets the zero flag when an arithmetic operation, logic operation, or data manipulation produces a result of 0x00 or 0x0000. Simply loading or storing an 8-bit or 16-bit value causes Z to be set if the loaded or stored value was all 0s. 0 Non-zero result 1 Zero result
0 C	**Carry/Borrow Flag** — The CPU sets the carry/borrow flag when an addition operation produces a carry out of bit 7 of the accumulator or when a subtraction operation requires a borrow. Some instructions — such as bit test and branch, shift, and rotate — also clear or set the carry/borrow flag. 0 No carry out of bit 7 1 Carry out of bit 7

8.3 Addressing Modes

Addressing modes define the way the CPU accesses operands and data. In the HCS08, all memory, status and control registers, and input/output (I/O) ports share a single 64-Kbyte linear address space so a 16-bit binary address can uniquely identify any memory location. This arrangement means that the same instructions that access variables in RAM can also be used to access I/O and control registers or nonvolatile program space.

Some instructions use more than one addressing mode. For instance, move instructions use one addressing mode to specify the source operand and a second addressing mode to specify the destination address. Instructions such as BRCLR, BRSET, CBEQ, and DBNZ use one addressing mode to specify the location of an operand for a test and then use relative addressing mode to specify the branch destination address when the tested condition is true. For BRCLR, BRSET, CBEQ, and DBNZ, the addressing mode listed in the instruction set tables is the addressing mode needed to access the operand to be tested, and relative addressing mode is implied for the branch destination.

8.3.1 Inherent Addressing Mode (INH)

In this addressing mode, operands needed to complete the instruction (if any) are located within CPU registers so the CPU does not need to access memory to get any operands.

8.3.2 Relative Addressing Mode (REL)

Relative addressing mode is used to specify the destination location for branch instructions. A signed 8-bit offset value is located in the memory location immediately following the opcode. During execution, if the branch condition is true, the signed offset is sign-extended to a 16-bit value and is added to the current contents of the program counter, which causes program execution to continue at the branch destination address.

8.3.3 Immediate Addressing Mode (IMM)

In immediate addressing mode, the operand needed to complete the instruction is included in the object code immediately following the instruction opcode in memory. In the case of a 16-bit immediate operand, the high-order byte is located in the next memory location after the opcode, and the low-order byte is located in the next memory location after that.

8.3.4 Direct Addressing Mode (DIR)

In direct addressing mode, the instruction includes the low-order eight bits of an address in the direct page (0x0000–0x00FF). During execution a 16-bit address is formed by concatenating an implied 0x00 for the high-order half of the address and the direct address from the instruction to get the 16-bit address where the desired operand is located. This is faster and more memory efficient than specifying a complete 16-bit address for the operand.

8.3.5 Extended Addressing Mode (EXT)

In extended addressing mode, the full 16-bit address of the operand is located in the next two bytes of program memory after the opcode (high byte first).

8.3.6 Indexed Addressing Mode

Indexed addressing mode has seven variations including five that use the 16-bit H:X index register pair and two that use the stack pointer as the base reference.

8.3.6.1 Indexed, No Offset (IX)

This variation of indexed addressing uses the 16-bit value in the H:X index register pair as the address of the operand needed to complete the instruction.

8.3.6.2 Indexed, No Offset with Post Increment (IX+)

This variation of indexed addressing uses the 16-bit value in the H:X index register pair as the address of the operand needed to complete the instruction. The index register pair is then incremented (H:X = H:X + 0x0001) after the operand has been fetched. This addressing mode is only used for MOV and CBEQ instructions.

8.3.6.3 Indexed, 8-Bit Offset (IX1)

This variation of indexed addressing uses the 16-bit value in the H:X index register pair plus an unsigned 8-bit offset included in the instruction as the address of the operand needed to complete the instruction.

8.3.6.4 Indexed, 8-Bit Offset with Post Increment (IX1+)

This variation of indexed addressing uses the 16-bit value in the H:X index register pair plus an unsigned 8-bit offset included in the instruction as the address of the operand needed to complete the instruction. The index register pair is then incremented (H:X = H:X + 0x0001) after the operand has been fetched. This addressing mode is used only for the CBEQ instruction.

8.3.6.5 Indexed, 16-Bit Offset (IX2)

This variation of indexed addressing uses the 16-bit value in the H:X index register pair plus a 16-bit offset included in the instruction as the address of the operand needed to complete the instruction.

8.3.6.6 SP-Relative, 8-Bit Offset (SP1)

This variation of indexed addressing uses the 16-bit value in the stack pointer (SP) plus an unsigned 8-bit offset included in the instruction as the address of the operand needed to complete the instruction.

8.3.6.7 SP-Relative, 16-Bit Offset (SP2)

This variation of indexed addressing uses the 16-bit value in the stack pointer (SP) plus a 16-bit offset included in the instruction as the address of the operand needed to complete the instruction.

8.4 Special Operations

The CPU performs a few special operations that are similar to instructions but do not have opcodes like other CPU instructions. In addition, a few instructions such as STOP and WAIT directly affect other MCU circuitry. This section provides additional information about these operations.

8.4.1 Reset Sequence

Reset can be caused by a power-on-reset (POR) event, internal conditions such as the COP (computer operating properly) watchdog, or by assertion of an external active-low reset pin. When a reset event occurs, the CPU immediately stops whatever it is doing (the MCU does not wait for an instruction boundary before responding to a reset event). For a more detailed discussion about how the MCU recognizes resets and determines the source, refer to the Resets, Interrupts, and System Configuration chapter.

The reset event is considered concluded when the sequence to determine whether the reset came from an internal source is done and when the reset pin is no longer asserted. At the conclusion of a reset event, the CPU performs a 6-cycle sequence to fetch the reset vector from 0xFFFE and 0xFFFF and to fill the instruction queue in preparation for execution of the first program instruction.

8.4.2 Interrupt Sequence

When an interrupt is requested, the CPU completes the current instruction before responding to the interrupt. At this point, the program counter is pointing at the start of the next instruction, which is where the CPU should return after servicing the interrupt. The CPU responds to an interrupt by performing the same sequence of operations as for a software interrupt (SWI) instruction, except the address used for the vector fetch is determined by the highest priority interrupt that is pending when the interrupt sequence started.

The CPU sequence for an interrupt is:

1. Store the contents of PCL, PCH, X, A, and CCR on the stack, in that order.
2. Set the I bit in the CCR.
3. Fetch the high-order half of the interrupt vector.
4. Fetch the low-order half of the interrupt vector.
5. Delay for one free bus cycle.
6. Fetch three bytes of program information starting at the address indicated by the interrupt vector to fill the instruction queue in preparation for execution of the first instruction in the interrupt service routine.

After the CCR contents are pushed onto the stack, the I bit in the CCR is set to prevent other interrupts while in the interrupt service routine. Although it is possible to clear the I bit with an instruction in the

interrupt service routine, this would allow nesting of interrupts (which is not recommended because it leads to programs that are difficult to debug and maintain).

For compatibility with the earlier M68HC05 MCUs, the high-order half of the H:X index register pair (H) is not saved on the stack as part of the interrupt sequence. The user must use a PSHH instruction at the beginning of the service routine to save H and then use a PULH instruction just before the RTI that ends the interrupt service routine. It is not necessary to save H if you are certain that the interrupt service routine does not use any instructions or auto-increment addressing modes that might change the value of H.

The software interrupt (SWI) instruction is like a hardware interrupt except that it is not masked by the global I bit in the CCR and it is associated with an instruction opcode within the program so it is not asynchronous to program execution.

8.4.3 Wait Mode Operation

The WAIT instruction enables interrupts by clearing the I bit in the CCR. It then halts the clocks to the CPU to reduce overall power consumption while the CPU is waiting for the interrupt or reset event that will wake the CPU from wait mode. When an interrupt or reset event occurs, the CPU clocks will resume and the interrupt or reset event will be processed normally.

If a serial BACKGROUND command is issued to the MCU through the background debug interface while the CPU is in wait mode, CPU clocks will resume and the CPU will enter active background mode where other serial background commands can be processed. This ensures that a host development system can still gain access to a target MCU even if it is in wait mode.

8.4.4 Stop Mode Operation

Usually, all system clocks, including the crystal oscillator (when used), are halted during stop mode to minimize power consumption. In such systems, external circuitry is needed to control the time spent in stop mode and to issue a signal to wake up the target MCU when it is time to resume processing. Unlike the earlier M68HC05 and M68HC08 MCUs, the HCS08 can be configured to keep a minimum set of clocks running in stop mode. This optionally allows an internal periodic signal to wake the target MCU from stop mode.

When a host debug system is connected to the background debug pin (BKGD) and the ENBDM control bit has been set by a serial command through the background interface (or because the MCU was reset into active background mode), the oscillator is forced to remain active when the MCU enters stop mode. In this case, if a serial BACKGROUND command is issued to the MCU through the background debug interface while the CPU is in stop mode, CPU clocks will resume and the CPU will enter active background mode where other serial background commands can be processed. This ensures that a host development system can still gain access to a target MCU even if it is in stop mode.

Recovery from stop mode depends on the particular HCS08 and whether the oscillator was stopped in stop mode. Refer to the Modes of Operation chapter for more details.

8.4.5 BGND Instruction

The BGND instruction is new to the HCS08 compared to the M68HC08. BGND would not be used in normal user programs because it forces the CPU to stop processing user instructions and enter the active background mode. The only way to resume execution of the user program is through reset or by a host debug system issuing a GO, TRACE1, or TAGGO serial command through the background debug interface.

Software-based breakpoints can be set by replacing an opcode at the desired breakpoint address with the BGND opcode. When the program reaches this breakpoint address, the CPU is forced to active background mode rather than continuing the user program.

8.5 HCS08 Instruction Set Summary

Instruction Set Summary Nomenclature

The nomenclature listed here is used in the instruction descriptions in Table 8-2.

Operators

( )	=	Contents of register or memory location shown inside parentheses
←	=	Is loaded with (read: “gets”)
&	=	Boolean AND
|	=	Boolean OR
⊕	=	Boolean exclusive-OR
×	=	Multiply
÷	=	Divide
:	=	Concatenate
+	=	Add
−	=	Negate (two’s complement)

CPU registers

A	=	Accumulator
CCR	=	Condition code register
H	=	Index register, higher order (most significant) 8 bits
X	=	Index register, lower order (least significant) 8 bits
PC	=	Program counter
PCH	=	Program counter, higher order (most significant) 8 bits
PCL	=	Program counter, lower order (least significant) 8 bits
SP	=	Stack pointer

Memory and addressing

M	=	A memory location or absolute data, depending on addressing mode
M:M + 0x0001	=	A 16-bit value in two consecutive memory locations. The higher-order (most significant) 8 bits are located at the address of M, and the lower-order (least significant) 8 bits are located at the next higher sequential address.

Condition code register (CCR) bits

V	=	Two’s complement overflow indicator, bit 7
H	=	Half carry, bit 4
I	=	Interrupt mask, bit 3
N	=	Negative indicator, bit 2
Z	=	Zero indicator, bit 1
C	=	Carry/borrow, bit 0 (carry out of bit 7)

CCR activity notation

−	=	Bit not affected

0	=	Bit forced to 0
1	=	Bit forced to 1
Þ	=	Bit set or cleared according to results of operation
U	=	Undefined after the operation

Machine coding notation

dd	=	Low-order 8 bits of a direct address 0x0000–0x00FF (high byte assumed to be 0x00)
ee	=	Upper 8 bits of 16-bit offset
ff	=	Lower 8 bits of 16-bit offset or 8-bit offset
ii	=	One byte of immediate data
jj	=	High-order byte of a 16-bit immediate data value
kk	=	Low-order byte of a 16-bit immediate data value
hh	=	High-order byte of 16-bit extended address
ll	=	Low-order byte of 16-bit extended address
rr	=	Relative offset

Source form

Everything in the source forms columns, *except expressions in italic characters,* is literal information that must appear in the assembly source file exactly as shown. The initial 3- to 5-letter mnemonic is always a literal expression. All commas, pound signs (#), parentheses, and plus signs (+) are literal characters.

n	—	Any label or expression that evaluates to a single integer in the range 0–7
opr8i	—	Any label or expression that evaluates to an 8-bit immediate value
opr16i	—	Any label or expression that evaluates to a 16-bit immediate value
opr8a	—	Any label or expression that evaluates to an 8-bit value. The instruction treats this 8-bit value as the low order 8 bits of an address in the direct page of the 64-Kbyte address space (0x00xx).
opr16a	—	Any label or expression that evaluates to a 16-bit value. The instruction treats this value as an address in the 64-Kbyte address space.
oprx8	—	Any label or expression that evaluates to an unsigned 8-bit value, used for indexed addressing
oprx16	—	Any label or expression that evaluates to a 16-bit value. Because the HCS08 has a 16-bit address bus, this can be either a signed or an unsigned value.
rel	—	Any label or expression that refers to an address that is within –128 to +127 locations from the next address after the last byte of object code for the current instruction. The assembler will calculate the 8-bit signed offset and include it in the object code for this instruction.

Address modes

INH	=	Inherent (no operands)
IMM	=	8-bit or 16-bit immediate
DIR	=	8-bit direct
EXT	=	16-bit extended

IX	=	16-bit indexed no offset
IX+	=	16-bit indexed no offset, post increment (CBEQ and MOV only)
IX1	=	16-bit indexed with 8-bit offset from H:X
IX1+	=	16-bit indexed with 8-bit offset, post increment (CBEQ only)
IX2	=	16-bit indexed with 16-bit offset from H:X
REL	=	8-bit relative offset
SP1	=	Stack pointer with 8-bit offset
SP2	=	Stack pointer with 16-bit offset

Table 8-2. HCS08 Instruction Set Summary (Sheet 1 of 7)

Source Form	Operation	Description	Effect on CCR						Address Mode	Opcode	Operand	Bus Cycles[1]
			V	H	I	N	Z	C				
ADC #*opr8i* ADC *opr8a* ADC *opr16a* ADC *oprx16*,X ADC *oprx8*,X ADC ,X ADC *oprx16*,SP ADC *oprx8*,SP	Add with Carry	A ← (A) + (M) + (C)	↕	↕	–	↕	↕	↕	IMM DIR EXT IX2 IX1 IX SP2 SP1	A9 B9 C9 D9 E9 F9 9ED9 9EE9	ii dd hh ll ee ff ff	2 3 4 4 3 3 5 4
ADD #*opr8i* ADD *opr8a* ADD *opr16a* ADD *oprx16*,X ADD *oprx8*,X ADD ,X ADD *oprx16*,SP ADD *oprx8*,SP	Add without Carry	A ← (A) + (M)	↕	↕	–	↕	↕	↕	IMM DIR EXT IX2 IX1 IX SP2 SP1	AB BB CB DB EB FB 9EDB 9EEB	ii dd hh ll ee ff ff	2 3 4 4 3 3 5 4
AIS #*opr8i*	Add Immediate Value (Signed) to Stack Pointer	SP ← (SP) + (M) M is sign extended to a 16-bit value	–	–	–	–	–	–	IMM	A7	ii	2
AIX #*opr8i*	Add Immediate Value (Signed) to Index Register (H:X)	H:X ← (H:X) + (M) M is sign extended to a 16-bit value	–	–	–	–	–	–	IMM	AF	ii	2
AND #*opr8i* AND *opr8a* AND *opr16a* AND *oprx16*,X AND *oprx8*,X AND ,X AND *oprx16*,SP AND *oprx8*,SP	Logical AND	A ← (A) & (M)	0	–	–	↕	↕	–	IMM DIR EXT IX2 IX1 IX SP2 SP1	A4 B4 C4 D4 E4 F4 9ED4 9EE4	ii dd hh ll ee ff ff	2 3 4 4 3 3 5 4
ASL *opr8a* ASLA ASLX ASL *oprx8*,X ASL ,X ASL *oprx8*,SP	Arithmetic Shift Left (Same as LSL)	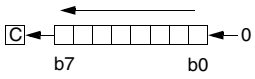	↕	–	–	↕	↕	↕	DIR INH INH IX1 IX SP1	38 48 58 68 78 9E68	dd ff ff	5 1 1 5 4 6
ASR *opr8a* ASRA ASRX ASR *oprx8*,X ASR ,X ASR *oprx8*,SP	Arithmetic Shift Right	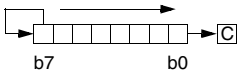	↕	–	–	↕	↕	↕	DIR INH INH IX1 IX SP1	37 47 57 67 77 9E67	dd ff ff	5 1 1 5 4 6
BCC *rel*	Branch if Carry Bit Clear	Branch if (C) = 0	–	–	–	–	–	–	REL	24	rr	3

Table 8-2. HCS08 Instruction Set Summary (Sheet 2 of 7)

Source Form	Operation	Description	Effect on CCR						Address Mode	Opcode	Operand	Bus Cycles[1]
			V	H	I	N	Z	C				
BCLR *n,opr8a*	Clear Bit n in Memory	Mn ← 0	–	–	–	–	–	–	DIR (b0) DIR (b1) DIR (b2) DIR (b3) DIR (b4) DIR (b5) DIR (b6) DIR (b7)	11 13 15 17 19 1B 1D 1F	dd dd dd dd dd dd dd dd	5 5 5 5 5 5 5 5
BCS *rel*	Branch if Carry Bit Set (Same as BLO)	Branch if (C) = 1	–	–	–	–	–	–	REL	25	rr	3
BEQ *rel*	Branch if Equal	Branch if (Z) = 1	–	–	–	–	–	–	REL	27	rr	3
BGE *rel*	Branch if Greater Than or Equal To (Signed Operands)	Branch if $(N \oplus V) = 0$	–	–	–	–	–	–	REL	90	rr	3
BGND	Enter Active Background if ENBDM = 1	Waits For and Processes BDM Commands Until GO, TRACE1, or TAGGO	–	–	–	–	–	–	INH	82		5+
BGT *rel*	Branch if Greater Than (Signed Operands)	Branch if $(Z) \mid (N \oplus V) = 0$	–	–	–	–	–	–	REL	92	rr	3
BHCC *rel*	Branch if Half Carry Bit Clear	Branch if (H) = 0	–	–	–	–	–	–	REL	28	rr	3
BHCS *rel*	Branch if Half Carry Bit Set	Branch if (H) = 1	–	–	–	–	–	–	REL	29	rr	3
BHI *rel*	Branch if Higher	Branch if $(C) \mid (Z) = 0$	–	–	–	–	–	–	REL	22	rr	3
BHS *rel*	Branch if Higher or Same (Same as BCC)	Branch if (C) = 0	–	–	–	–	–	–	REL	24	rr	3
BIH *rel*	Branch if IRQ Pin High	Branch if IRQ pin = 1	–	–	–	–	–	–	REL	2F	rr	3
BIL *rel*	Branch if IRQ Pin Low	Branch if IRQ pin = 0	–	–	–	–	–	–	REL	2E	rr	3
BIT #*opr8i* BIT *opr8a* BIT *opr16a* BIT *oprx16*,X BIT *oprx8*,X BIT ,X BIT *oprx16*,SP BIT *oprx8*,SP	Bit Test	(A) & (M) (CCR Updated but Operands Not Changed)	0	–	–	↕	↕	–	IMM DIR EXT IX2 IX1 IX SP2 SP1	A5 B5 C5 D5 E5 F5 9ED5 9EE5	ii dd hh ll ee ff ff ee ff ff	2 3 4 4 3 3 5 4
BLE *rel*	Branch if Less Than or Equal To (Signed Operands)	Branch if $(Z) \mid (N \oplus V) = 1$	–	–	–	–	–	–	REL	93	rr	3
BLO *rel*	Branch if Lower (Same as BCS)	Branch if (C) = 1	–	–	–	–	–	–	REL	25	rr	3
BLS *rel*	Branch if Lower or Same	Branch if $(C) \mid (Z) = 1$	–	–	–	–	–	–	REL	23	rr	3
BLT *rel*	Branch if Less Than (Signed Operands)	Branch if $(N \oplus V) = 1$	–	–	–	–	–	–	REL	91	rr	3
BMC *rel*	Branch if Interrupt Mask Clear	Branch if (I) = 0	–	–	–	–	–	–	REL	2C	rr	3
BMI *rel*	Branch if Minus	Branch if (N) = 1	–	–	–	–	–	–	REL	2B	rr	3
BMS *rel*	Branch if Interrupt Mask Set	Branch if (I) = 1	–	–	–	–	–	–	REL	2D	rr	3
BNE *rel*	Branch if Not Equal	Branch if (Z) = 0	–	–	–	–	–	–	REL	26	rr	3
BPL *rel*	Branch if Plus	Branch if (N) = 0	–	–	–	–	–	–	REL	2A	rr	3
BRA *rel*	Branch Always	No Test	–	–	–	–	–	–	REL	20	rr	3

Table 8-2. HCS08 Instruction Set Summary (Sheet 3 of 7)

Source Form	Operation	Description	Effect on CCR V	H	I	N	Z	C	Address Mode	Opcode	Operand	Bus Cycles[1]
BRCLR *n,opr8a,rel*	Branch if Bit *n* in Memory Clear	Branch if (Mn) = 0	–	–	–	–	–	↕	DIR (b0) DIR (b1) DIR (b2) DIR (b3) DIR (b4) DIR (b5) DIR (b6) DIR (b7)	01 03 05 07 09 0B 0D 0F	dd rr dd rr dd rr dd rr dd rr dd rr dd rr dd rr	5 5 5 5 5 5 5 5
BRN *rel*	Branch Never	Uses 3 Bus Cycles	–	–	–	–	–	–	REL	21	rr	3
BRSET *n,opr8a,rel*	Branch if Bit *n* in Memory Set	Branch if (Mn) = 1	–	–	–	–	–	↕	DIR (b0) DIR (b1) DIR (b2) DIR (b3) DIR (b4) DIR (b5) DIR (b6) DIR (b7)	00 02 04 06 08 0A 0C 0E	dd rr dd rr dd rr dd rr dd rr dd rr dd rr dd rr	5 5 5 5 5 5 5 5
BSET *n,opr8a*	Set Bit *n* in Memory	Mn ← 1	–	–	–	–	–	–	DIR (b0) DIR (b1) DIR (b2) DIR (b3) DIR (b4) DIR (b5) DIR (b6) DIR (b7)	10 12 14 16 18 1A 1C 1E	dd dd dd dd dd dd dd dd	5 5 5 5 5 5 5 5
BSR *rel*	Branch to Subroutine	PC ← (PC) + 0x0002 push (PCL); SP ← (SP) – 0x0001 push (PCH); SP ← (SP) – 0x0001 PC ← (PC) + *rel*	–	–	–	–	–	–	REL	AD	rr	5
CBEQ *opr8a,rel* CBEQA #*opr8i,rel* CBEQX #*opr8i,rel* CBEQ *oprx8*,X+,*rel* CBEQ ,X+,*rel* CBEQ *oprx8*,SP,*rel*	Compare and Branch if Equal	Branch if (A) = (M) Branch if (A) = (M) Branch if (X) = (M) Branch if (A) = (M) Branch if (A) = (M) Branch if (A) = (M)	–	–	–	–	–	–	DIR IMM IMM IX1+ IX+ SP1	31 41 51 61 71 9E61	dd rr ii rr ii rr ff rr rr ff rr	5 4 4 5 5 6
CLC	Clear Carry Bit	C ← 0	–	–	–	–	–	0	INH	98		1
CLI	Clear Interrupt Mask Bit	I ← 0	–	–	0	–	–	–	INH	9A		1
CLR *opr8a* CLRA CLRX CLRH CLR *oprx8*,X CLR ,X CLR *oprx8*,SP	Clear	M ← 0x00 A ← 0x00 X ← 0x00 H ← 0x00 M ← 0x00 M ← 0x00 M ← 0x00	0	–	–	0	1	–	DIR INH INH INH IX1 IX SP1	3F 4F 5F 8C 6F 7F 9E6F	dd ff ff	5 1 1 1 5 4 6
CMP #*opr8i* CMP *opr8a* CMP *opr16a* CMP *oprx16*,X CMP *oprx8*,X CMP ,X CMP *oprx16*,SP CMP *oprx8*,SP	Compare Accumulator with Memory	(A) – (M) (CCR Updated But Operands Not Changed)	↕	–	–	↕	↕	↕	IMM DIR EXT IX2 IX1 IX SP2 SP1	A1 B1 C1 D1 E1 F1 9ED1 9EE1	ii dd hh ll ee ff ff ee ff ff	2 3 4 4 3 3 5 4
COM *opr8a* COMA COMX COM *oprx8*,X COM ,X COM *oprx8*,SP	Complement (One's Complement)	M ← ($\overline{M}$)= 0xFF – (M) A ← ($\overline{A}$) = 0xFF – (A) X ← ($\overline{X}$) = 0xFF – (X) M ← ($\overline{M}$) = 0xFF – (M) M ← ($\overline{M}$) = 0xFF – (M) M ← ($\overline{M}$) = 0xFF – (M)	0	–	–	↕	↕	1	DIR INH INH IX1 IX SP1	33 43 53 63 73 9E63	dd ff ff	5 1 1 5 4 6
CPHX *opr16a* CPHX #*opr16i* CPHX *opr8a* CPHX *oprx8*,SP	Compare Index Register (H:X) with Memory	(H:X) – (M:M + 0x0001) (CCR Updated But Operands Not Changed)	↕	–	–	↕	↕	↕	EXT IMM DIR SP1	3E 65 75 9EF3	hh ll jj kk dd ff	6 3 5 6

Table 8-2. HCS08 Instruction Set Summary (Sheet 4 of 7)

Source Form	Operation	Description	Effect on CCR V	H	I	N	Z	C	Address Mode	Opcode	Operand	Bus Cycles[1]
CPX #*opr8i* CPX *opr8a* CPX *opr16a* CPX *oprx16*,X CPX *oprx8*,X CPX ,X CPX *oprx16*,SP CPX *oprx8*,SP	Compare X (Index Register Low) with Memory	(X) – (M) (CCR Updated But Operands Not Changed)	↕	–	–	↕	↕	↕	IMM DIR EXT IX2 IX1 IX SP2 SP1	A3 B3 C3 D3 E3 F3 9ED3 9EE3	ii dd hh ll ee ff ff	2 3 4 4 3 3 5 4
DAA	Decimal Adjust Accumulator After ADD or ADC of BCD Values	$(A)_{10}$	U	–	–	↕	↕	↕	INH	72		1
DBNZ *opr8a*,*rel* DBNZA *rel* DBNZX *rel* DBNZ *oprx8*,X,*rel* DBNZ ,X,*rel* DBNZ *oprx8*,SP,*rel*	Decrement and Branch if Not Zero	Decrement A, X, or M Branch if (result) ≠ 0 DBNZX Affects X Not H	–	–	–	–	–	–	DIR INH INH IX1 IX SP1	3B 4B 5B 6B 7B 9E6B	dd rr rr rr ff rr rr ff rr	7 4 4 7 6 8
DEC *opr8a* DECA DECX DEC *oprx8*,X DEC ,X DEC *oprx8*,SP	Decrement	M ← (M) – 0x01 A ← (A) – 0x01 X ← (X) – 0x01 M ← (M) – 0x01 M ← (M) – 0x01 M ← (M) – 0x01	↕	–	–	↕	↕	–	DIR INH INH IX1 IX SP1	3A 4A 5A 6A 7A 9E6A	dd ff ff	5 1 1 5 4 6
DIV	Divide	A ← (H:A)÷(X) H ← Remainder	–	–	–	–	↕	↕	INH	52		6
EOR #*opr8i* EOR *opr8a* EOR *opr16a* EOR *oprx16*,X EOR *oprx8*,X EOR ,X EOR *oprx16*,SP EOR *oprx8*,SP	Exclusive OR Memory with Accumulator	A ← (A ⊕ M)	0	–	–	↕	↕	–	IMM DIR EXT IX2 IX1 IX SP2 SP1	A8 B8 C8 D8 E8 F8 9ED8 9EE8	ii dd hh ll ee ff ff ee ff ff	2 3 4 4 3 3 5 4
INC *opr8a* INCA INCX INC *oprx8*,X INC ,X INC *oprx8*,SP	Increment	M ← (M) + 0x01 A ← (A) + 0x01 X ← (X) + 0x01 M ← (M) + 0x01 M ← (M) + 0x01 M ← (M) + 0x01	↕	–	–	↕	↕	–	DIR INH INH IX1 IX SP1	3C 4C 5C 6C 7C 9E6C	dd ff ff	5 1 1 5 4 6
JMP *opr8a* JMP *opr16a* JMP *oprx16*,X JMP *oprx8*,X JMP ,X	Jump	PC ← Jump Address	–	–	–	–	–	–	DIR EXT IX2 IX1 IX	BC CC DC EC FC	dd hh ll ee ff ff	3 4 4 3 3
JSR *opr8a* JSR *opr16a* JSR *oprx16*,X JSR *oprx8*,X JSR ,X	Jump to Subroutine	PC ← (PC) + *n* (*n* = 1, 2, or 3) Push (PCL); SP ← (SP) – 0x0001 Push (PCH); SP ← (SP) – 0x0001 PC ← Unconditional Address	–	–	–	–	–	–	DIR EXT IX2 IX1 IX	BD CD DD ED FD	dd hh ll ee ff ff	5 6 6 5 5
LDA #*opr8i* LDA *opr8a* LDA *opr16a* LDA *oprx16*,X LDA *oprx8*,X LDA ,X LDA *oprx16*,SP LDA *oprx8*,SP	Load Accumulator from Memory	A ← (M)	0	–	–	↕	↕	–	IMM DIR EXT IX2 IX1 IX SP2 SP1	A6 B6 C6 D6 E6 F6 9ED6 9EE6	ii dd hh ll ee ff ff ee ff ff	2 3 4 4 3 3 5 4
LDHX #*opr16i* LDHX *opr8a* LDHX *opr16a* LDHX ,X LDHX *oprx16*,X LDHX *oprx8*,X LDHX *oprx8*,SP	Load Index Register (H:X) from Memory	H:X ← (M:M + 0x0001)	0	–	–	↕	↕	–	IMM DIR EXT IX IX2 IX1 SP1	45 55 32 9EAE 9EBE 9ECE 9EFE	jj kk dd hh ll ee ff ff ff	3 4 5 5 6 5 5

Table 8-2. HCS08 Instruction Set Summary (Sheet 5 of 7)

Source Form	Operation	Description	Effect on CCR V	H	I	N	Z	C	Address Mode	Opcode	Operand	Bus Cycles[1]
LDX #*opr8i* LDX *opr8a* LDX *opr16a* LDX *oprx16*,X LDX *oprx8*,X LDX ,X LDX *oprx16*,SP LDX *oprx8*,SP	Load X (Index Register Low) from Memory	X ← (M)	0	–	–	↕	↕	–	IMM DIR EXT IX2 IX1 IX SP2 SP1	AE BE CE DE EE FE 9EDE 9EEE	ii dd hh ll ee ff ff	2 3 4 4 3 3 5 4
LSL *opr8a* LSLA LSLX LSL *oprx8*,X LSL ,X LSL *oprx8*,SP	Logical Shift Left (Same as ASL)	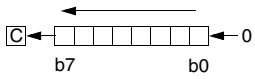	↕	–	–	↕	↕	↕	DIR INH INH IX1 IX SP1	38 48 58 68 78 9E68	dd ff ff	5 1 1 5 4 6
LSR *opr8a* LSRA LSR*X* LSR *oprx8*,X LSR ,X LSR *oprx8*,SP	Logical Shift Right	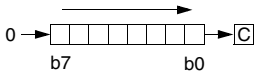	↕	–	–	0	↕	↕	DIR INH INH IX1 IX SP1	34 44 54 64 74 9E64	dd ff ff	5 1 1 5 4 6
MOV *opr8a*,*opr8a* MOV *opr8a*,X+ MOV #*opr8i*,*opr8a* MOV ,X+,*opr8a*	Move	$(M)_{destination} \leftarrow (M)_{source}$ H:X ← (H:X) + 0x0001 in IX+/DIR and DIR/IX+ Modes	0	–	–	↕	↕	–	DIR/DIR DIR/IX+ IMM/DIR IX+/DIR	4E 5E 6E 7E	dd dd dd ii dd dd	5 5 4 5
MUL	Unsigned multiply	X:A ← (X) × (A)	–	0	–	–	–	0	INH	42		5
NEG *opr8a* NEGA NEGX NEG *oprx8*,X NEG ,X NEG *oprx8*,SP	Negate (Two's Complement)	M ← – (M) = 0x00 – (M) A ← – (A) = 0x00 – (A) X ← – (X) = 0x00 – (X) M ← – (M) = 0x00 – (M) M ← – (M) = 0x00 – (M) M ← – (M) = 0x00 – (M)	↕	–	–	↕	↕	↕	DIR INH INH IX1 IX SP1	30 40 50 60 70 9E60	dd ff ff	5 1 1 5 4 6
NOP	No Operation	Uses 1 Bus Cycle	–	–	–	–	–	–	INH	9D		1
NSA	Nibble Swap Accumulator	A ← (A[3:0]:A[7:4])	–	–	–	–	–	–	INH	62		1
ORA #*opr8i* ORA *opr8a* ORA *opr16a* ORA *oprx16*,X ORA *oprx8*,X ORA ,X ORA *oprx16*,SP ORA *oprx8*,SP	Inclusive OR Accumulator and Memory	A ← (A) | (M)	0	–	–	↕	↕	–	IMM DIR EXT IX2 IX1 IX SP2 SP1	AA BA CA DA EA FA 9EDA 9EEA	ii dd hh ll ee ff ff	2 3 4 4 3 3 5 4
PSHA	Push Accumulator onto Stack	Push (A); SP ← (SP) – 0x0001	–	–	–	–	–	–	INH	87		2
PSHH	Push H (Index Register High) onto Stack	Push (H); SP ← (SP) – 0x0001	–	–	–	–	–	–	INH	8B		2
PSHX	Push X (Index Register Low) onto Stack	Push (X); SP ← (SP) – 0x0001	–	–	–	–	–	–	INH	89		2
PULA	Pull Accumulator from Stack	SP ← (SP + 0x0001); Pull (A)	–	–	–	–	–	–	INH	86		3
PULH	Pull H (Index Register High) from Stack	SP ← (SP + 0x0001); Pull (H)	–	–	–	–	–	–	INH	8A		3
PULX	Pull X (Index Register Low) from Stack	SP ← (SP + 0x0001); Pull (X)	–	–	–	–	–	–	INH	88		3
ROL *opr8a* ROLA ROLX ROL *oprx8*,X ROL ,X ROL *oprx8*,SP	Rotate Left through Carry	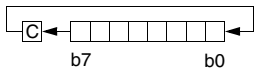	↕	–	–	↕	↕	↕	DIR INH INH IX1 IX SP1	39 49 59 69 79 9E69	dd ff ff	5 1 1 5 4 6

Table 8-2. HCS08 Instruction Set Summary (Sheet 6 of 7)

Source Form	Operation	Description	Effect on CCR V	H	I	N	Z	C	Address Mode	Opcode	Operand	Bus Cycles[1]
ROR *opr8a* RORA RORX ROR *oprx8*,X ROR ,X ROR *oprx8*,SP	Rotate Right through Carry	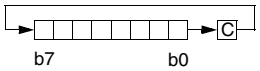	↕	–	–	↕	↕	↕	DIR INH INH IX1 IX SP1	36 46 56 66 76 9E66	dd ff ff	5 1 1 5 4 6
RSP	Reset Stack Pointer	SP ← 0xFF (High Byte Not Affected)	–	–	–	–	–	–	INH	9C		1
RTI	Return from Interrupt	SP ← (SP) + 0x0001; Pull (CCR) SP ← (SP) + 0x0001; Pull (A) SP ← (SP) + 0x0001; Pull (X) SP ← (SP) + 0x0001; Pull (PCH) SP ← (SP) + 0x0001; Pull (PCL)	↕	↕	↕	↕	↕	↕	INH	80		9
RTS	Return from Subroutine	SP ← SP + 0x0001; Pull (PCH) SP ← SP + 0x0001; Pull (PCL)	–	–	–	–	–	–	INH	81		6
SBC #*opr8i* SBC *opr8a* SBC *opr16a* SBC *oprx16*,X SBC *oprx8*,X SBC ,X SBC *oprx16*,SP SBC *oprx8*,SP	Subtract with Carry	A ← (A) – (M) – (C)	↕	–	–	↕	↕	↕	IMM DIR EXT IX2 IX1 IX SP2 SP1	A2 B2 C2 D2 E2 F2 9ED2 9EE2	ii dd hh ll ee ff ff ee ff ff	2 3 4 4 3 3 5 4
SEC	Set Carry Bit	C ← 1	–	–	–	–	–	1	INH	99		1
SEI	Set Interrupt Mask Bit	I ← 1	–	–	1	–	–	–	INH	9B		1
STA *opr8a* STA *opr16a* STA *oprx16*,X STA *oprx8*,X STA ,X STA *oprx16*,SP STA *oprx8*,SP	Store Accumulator in Memory	M ← (A)	0	–	–	↕	↕	–	DIR EXT IX2 IX1 IX SP2 SP1	B7 C7 D7 E7 F7 9ED7 9EE7	dd hh ll ee ff ff ee ff ff	3 4 4 3 2 5 4
STHX *opr8a* STHX *opr16a* STHX *oprx8*,SP	Store H:X (Index Reg.)	(M:M + 0x0001) ← (H:X)	0	–	–	↕	↕	–	DIR EXT SP1	35 96 9EFF	dd hh ll ff	4 5 5
STOP	Enable Interrupts: Stop Processing Refer to MCU Documentation	I bit ← 0; Stop Processing	–	–	0	–	–	–	INH	8E		2+
STX *opr8a* STX *opr16a* STX *oprx16*,X STX *oprx8*,X STX ,X STX *oprx16*,SP STX *oprx8*,SP	Store X (Low 8 Bits of Index Register) in Memory	M ← (X)	0	–	–	↕	↕	–	DIR EXT IX2 IX1 IX SP2 SP1	BF CF DF EF FF 9EDF 9EEF	dd hh ll ee ff ff ee ff ff	3 4 4 3 2 5 4
SUB #*opr8i* SUB *opr8a* SUB *opr16a* SUB *oprx16*,X SUB *oprx8*,X SUB ,X SUB *oprx16*,SP SUB *oprx8*,SP	Subtract	A ← (A) – (M)	↕	–	–	↕	↕	↕	IMM DIR EXT IX2 IX1 IX SP2 SP1	A0 B0 C0 D0 E0 F0 9ED0 9EE0	ii dd hh ll ee ff ff ee ff ff	2 3 4 4 3 3 5 4
SWI	Software Interrupt	PC ← (PC) + 0x0001 Push (PCL); SP ← (SP) – 0x0001 Push (PCH); SP ← (SP) – 0x0001 Push (X); SP ← (SP) – 0x0001 Push (A); SP ← (SP) – 0x0001 Push (CCR); SP ← (SP) – 0x0001 I ← 1; PCH ← Interrupt Vector High Byte PCL ← Interrupt Vector Low Byte	–	–	1	–	–	–	INH	83		11

Table 8-2. HCS08 Instruction Set Summary (Sheet 7 of 7)

Source Form	Operation	Description	Effect on CCR						Address Mode	Opcode	Operand	Bus Cycles[1]
			V	H	I	N	Z	C				
TAP	Transfer Accumulator to CCR	CCR ← (A)	↕	↕	↕	↕	↕	↕	INH	84		1
TAX	Transfer Accumulator to X (Index Register Low)	X ← (A)	–	–	–	–	–	–	INH	97		1
TPA	Transfer CCR to Accumulator	A ← (CCR)	–	–	–	–	–	–	INH	85		1
TST *opr8a* TSTA TSTX TST *oprx8*,X TST ,X TST *oprx8*,SP	Test for Negative or Zero	(M) – 0x00 (A) – 0x00 (X) – 0x00 (M) – 0x00 (M) – 0x00 (M) – 0x00	0	–	–	↕	↕	–	DIR INH INH IX1 IX SP1	3D 4D 5D 6D 7D 9E6D	dd ff ff	4 1 1 4 3 5
TSX	Transfer SP to Index Reg.	H:X ← (SP) + 0x0001	–	–	–	–	–	–	INH	95		2
TXA	Transfer X (Index Reg. Low) to Accumulator	A ← (X)	–	–	–	–	–	–	INH	9F		1
TXS	Transfer Index Reg. to SP	SP ← (H:X) – 0x0001	–	–	–	–	–	–	INH	94		2
WAIT	Enable Interrupts; Wait for Interrupt	I bit ← 0; Halt CPU	–	–	0	–	–	–	INH	8F		2+

[1] Bus clock frequency is one-half of the CPU clock frequency.

Table 8-3. Opcode Map (Sheet 1 of 2)

Bit-Manipulation		Branch	Read-Modify-Write					Control		Register/Memory					
00 5 BRSET0 3 DIR	10 5 BSET0 2 DIR	20 3 BRA 2 REL	30 5 NEG 2 DIR	40 1 NEGA 1 INH	50 1 NEGX 1 INH	60 5 NEG 2 IX1	70 4 NEG 1 IX	80 9 RTI 1 INH	90 3 BGE 2 REL	A0 2 SUB 2 IMM	B0 3 SUB 2 DIR	C0 4 SUB 3 EXT	D0 4 SUB 3 IX2	E0 3 SUB 2 IX1	F0 3 SUB 1 IX
01 5 BRCLR0 3 DIR	11 5 BCLR0 2 DIR	21 3 BRN 2 REL	31 5 CBEQ 3 DIR	41 4 CBEQA 3 IMM	51 4 CBEQX 3 IMM	61 5 CBEQ 3 IX1+	71 5 CBEQ 2 IX+	81 6 RTS 1 INH	91 3 BLT 2 REL	A1 2 CMP 2 IMM	B1 3 CMP 2 DIR	C1 4 CMP 3 EXT	D1 4 CMP 3 IX2	E1 3 CMP 2 IX1	F1 3 CMP 1 IX
02 5 BRSET1 3 DIR	12 5 BSET1 2 DIR	22 3 BHI 2 REL	32 5 LDHX 3 EXT	42 5 MUL 1 INH	52 6 DIV 1 INH	62 1 NSA 1 INH	72 1 DAA 1 INH	82 5+ BGND 1 INH	92 3 BGT 2 REL	A2 2 SBC 2 IMM	B2 3 SBC 2 DIR	C2 4 SBC 3 EXT	D2 4 SBC 3 IX2	E2 3 SBC 2 IX1	F2 3 SBC 1 IX
03 5 BRCLR1 3 DIR	13 5 BCLR1 2 DIR	23 3 BLS 2 REL	33 5 COM 2 DIR	43 1 COMA 1 INH	53 1 COMX 1 INH	63 5 COM 2 IX1	73 4 COM 1 IX	83 11 SWI 1 INH	93 3 BLE 2 REL	A3 2 CPX 2 IMM	B3 3 CPX 2 DIR	C3 4 CPX 3 EXT	D3 4 CPX 3 IX2	E3 3 CPX 2 IX1	F3 3 CPX 1 IX
04 5 BRSET2 3 DIR	14 5 BSET2 2 DIR	24 3 BCC 2 REL	34 5 LSR 2 DIR	44 1 LSRA 1 INH	54 1 LSRX 1 INH	64 5 LSR 2 IX1	74 4 LSR 1 IX	84 1 TAP 1 INH	94 2 TXS 1 INH	A4 2 AND 2 IMM	B4 3 AND 2 DIR	C4 4 AND 3 EXT	D4 4 AND 3 IX2	E4 3 AND 2 IX1	F4 3 AND 1 IX
05 5 BRCLR2 3 DIR	15 5 BCLR2 2 DIR	25 3 BCS 2 REL	35 4 STHX 2 DIR	45 3 LDHX 3 IMM	55 4 LDHX 2 DIR	65 3 CPHX 3 IMM	75 5 CPHX 2 DIR	85 1 TPA 1 INH	95 2 TSX 1 INH	A5 2 BIT 2 IMM	B5 3 BIT 2 DIR	C5 4 BIT 3 EXT	D5 4 BIT 3 IX2	E5 3 BIT 2 IX1	F5 3 BIT 1 IX
06 5 BRSET3 3 DIR	16 5 BSET3 2 DIR	26 3 BNE 2 REL	36 5 ROR 2 DIR	46 1 RORA 1 INH	56 1 RORX 1 INH	66 5 ROR 2 IX1	76 4 ROR 1 IX	86 3 PULA 1 INH	96 5 STHX 3 EXT	A6 2 LDA 2 IMM	B6 3 LDA 2 DIR	C6 4 LDA 3 EXT	D6 4 LDA 3 IX2	E6 3 LDA 2 IX1	F6 3 LDA 1 IX
07 5 BRCLR3 3 DIR	17 5 BCLR3 2 DIR	27 3 BEQ 2 REL	37 5 ASR 2 DIR	47 1 ASRA 1 INH	57 1 ASRX 1 INH	67 5 ASR 2 IX1	77 4 ASR 1 IX	87 2 PSHA 1 INH	97 1 TAX 1 INH	A7 2 AIS 2 IMM	B7 3 STA 2 DIR	C7 4 STA 3 EXT	D7 4 STA 3 IX2	E7 3 STA 2 IX1	F7 2 STA 1 IX
08 5 BRSET4 3 DIR	18 5 BSET4 2 DIR	28 3 BHCC 2 REL	38 5 LSL 2 DIR	48 1 LSLA 1 INH	58 1 LSLX 1 INH	68 5 LSL 2 IX1	78 4 LSL 1 IX	88 3 PULX 1 INH	98 1 CLC 1 INH	A8 2 EOR 2 IMM	B8 3 EOR 2 DIR	C8 4 EOR 3 EXT	D8 4 EOR 3 IX2	E8 3 EOR 2 IX1	F8 3 EOR 1 IX
09 5 BRCLR4 3 DIR	19 5 BCLR4 2 DIR	29 3 BHCS 2 REL	39 5 ROL 2 DIR	49 1 ROLA 1 INH	59 1 ROLX 1 INH	69 5 ROL 2 IX1	79 4 ROL 1 IX	89 2 PSHX 1 INH	99 1 SEC 1 INH	A9 2 ADC 2 IMM	B9 3 ADC 2 DIR	C9 4 ADC 3 EXT	D9 4 ADC 3 IX2	E9 3 ADC 2 IX1	F9 3 ADC 1 IX
0A 5 BRSET5 3 DIR	1A 5 BSET5 2 DIR	2A 3 BPL 2 REL	3A 5 DEC 2 DIR	4A 1 DECA 1 INH	5A 1 DECX 1 INH	6A 5 DEC 2 IX1	7A 4 DEC 1 IX	8A 3 PULH 1 INH	9A 1 CLI 1 INH	AA 2 ORA 2 IMM	BA 3 ORA 2 DIR	CA 4 ORA 3 EXT	DA 4 ORA 3 IX2	EA 3 ORA 2 IX1	FA 3 ORA 1 IX
0B 5 BRCLR5 3 DIR	1B 5 BCLR5 2 DIR	2B 3 BMI 2 REL	3B 7 DBNZ 3 DIR	4B 4 DBNZA 2 INH	5B 4 DBNZX 2 INH	6B 7 DBNZ 3 IX1	7B 6 DBNZ 2 IX	8B 2 PSHH 1 INH	9B 1 SEI 1 INH	AB 2 ADD 2 IMM	BB 3 ADD 2 DIR	CB 4 ADD 3 EXT	DB 4 ADD 3 IX2	EB 3 ADD 2 IX1	FB 3 ADD 1 IX
0C 5 BRSET6 3 DIR	1C 5 BSET6 2 DIR	2C 3 BMC 2 REL	3C 5 INC 2 DIR	4C 1 INCA 1 INH	5C 1 INCX 1 INH	6C 5 INC 2 IX1	7C 4 INC 1 IX	8C 1 CLRH 1 INH	9C 1 RSP 1 INH		BC 3 JMP 2 DIR	CC 4 JMP 3 EXT	DC 4 JMP 3 IX2	EC 3 JMP 2 IX1	FC 3 JMP 1 IX
0D 5 BRCLR6 3 DIR	1D 5 BCLR6 2 DIR	2D 3 BMS 2 REL	3D 4 TST 2 DIR	4D 1 TSTA 1 INH	5D 1 TSTX 1 INH	6D 4 TST 2 IX1	7D 3 TST 1 IX		9D 1 NOP 1 INH	AD 5 BSR 2 REL	BD 5 JSR 2 DIR	CD 6 JSR 3 EXT	DD 6 JSR 3 IX2	ED 5 JSR 2 IX1	FD 5 JSR 1 IX
0E 5 BRSET7 3 DIR	1E 5 BSET7 2 DIR	2E 3 BIL 2 REL	3E 6 CPHX 3 EXT	4E 5 MOV 3 DD	5E 5 MOV 2 DIX+	6E 4 MOV 3 IMD	7E 5 MOV 2 IX+D	8E 2+ STOP 1 INH	9E Page 2	AE 2 LDX 2 IMM	BE 3 LDX 2 DIR	CE 4 LDX 3 EXT	DE 4 LDX 3 IX2	EE 3 LDX 2 IX1	FE 3 LDX 1 IX
0F 5 BRCLR7 3 DIR	1F 5 BCLR7 2 DIR	2F 3 BIH 2 REL	3F 5 CLR 2 DIR	4F 1 CLRA 1 INH	5F 1 CLRX 1 INH	6F 5 CLR 2 IX1	7F 4 CLR 1 IX	8F 2+ WAIT 1 INH	9F 1 TXA 1 INH	AF 2 AIX 2 IMM	BF 3 STX 2 DIR	CF 4 STX 3 EXT	DF 4 STX 3 IX2	EF 3 STX 2 IX1	FF 2 STX 1 IX

INH	**Inherent**	**REL**	**Relative**	**SP1**	**Stack Pointer, 8-Bit Offset**
IMM	**Immediate**	**IX**	**Indexed, No Offset**	**SP2**	**Stack Pointer, 16-Bit Offset**
DIR	**Direct**	**IX1**	**Indexed, 8-Bit Offset**	**IX+**	**Indexed, No Offset with Post Increment**
EXT	**Extended**	**IX2**	**Indexed, 16-Bit Offset**		
DD	**DIR to DIR**	**IMD**	**IMM to DIR**	**IX1+**	**Indexed, 1-Byte Offset with Post Increment**
IX+D	**IX+ to DIR**	**DIX+**	**DIR to IX+**		

Opcode in Hexadecimal	F0 3	**HCS08 Cycles**
	SUB	**Instruction Mnemonic**
Number of Bytes	1 IX	**Addressing Mode**

Table 8-3. Opcode Map (Sheet 2 of 2)

Bit-Manipulation		Branch	Read-Modify-Write					Control		Register/Memory					
						9E60 6 NEG 3 SP1							9ED0 5 SUB 4 SP2	9EE0 4 SUB 3 SP1	
						9E61 6 CBEQ 4 SP1							9ED1 5 CMP 4 SP2	9EE1 4 CMP 3 SP1	
													9ED2 5 SBC 4 SP2	9EE2 4 SBC 3 SP1	
						9E63 6 COM 3 SP1							9ED3 5 CPX 4 SP2	9EE3 4 CPX 3 SP1	9EF3 6 CPHX 3 SP1
						9E64 6 LSR 3 SP1							9ED4 5 AND 4 SP2	9EE4 4 AND 3 SP1	
													9ED5 5 BIT 4 SP2	9EE5 4 BIT 3 SP1	
						9E66 6 ROR 3 SP1							9ED6 5 LDA 4 SP2	9EE6 4 LDA 3 SP1	
						9E67 6 ASR 3 SP1							9ED7 5 STA 4 SP2	9EE7 4 STA 3 SP1	
						9E68 6 LSL 3 SP1							9ED8 5 EOR 4 SP2	9EE8 4 EOR 3 SP1	
						9E69 6 ROL 3 SP1							9ED9 5 ADC 4 SP2	9EE9 4 ADC 3 SP1	
						9E6A 6 DEC 3 SP1							9EDA 5 ORA 4 SP2	9EEA 4 ORA 3 SP1	
						9E6B 8 DBNZ 4 SP1							9EDB 5 ADD 4 SP2	9EEB 4 ADD 3 SP1	
						9E6C 6 INC 3 SP1									
						9E6D 5 TST 3 SP1									
										9EAE 5 LDHX 2 IX	9EBE 6 LDHX 4 IX2	9ECE 5 LDHX 3 IX1	9EDE 5 LDX 4 SP2	9EEE 4 LDX 3 SP1	9EFE 5 LDHX 3 SP1
						9E6F 6 CLR 3 SP1							9EDF 5 STX 4 SP2	9EEF 4 STX 3 SP1	9EFF 5 STHX 3 SP1

INH	**Inherent**	**REL**	**Relative**	**SP1**	**Stack Pointer, 8-Bit Offset**
IMM	**Immediate**	**IX**	**Indexed, No Offset**	**SP2**	**Stack Pointer, 16-Bit Offset**
DIR	**Direct**	**IX1**	**Indexed, 8-Bit Offset**	**IX+**	**Indexed, No Offset with Post Increment**
EXT	**Extended**	**IX2**	**Indexed, 16-Bit Offset**		
DD	**DIR to DIR**	**IMD**	**IMM to DIR**	**IX1+**	**Indexed, 1-Byte Offset with Post Increment**
IX+D	**IX+ to DIR**	**DIX+**	**DIR to IX+**		

Note: All Sheet 2 Opcodes are Preceded by the Page 2 Prebyte (9E)

Prebyte (9E) and Opcode in Hexadecimal — 9E60 6
NEG
Number of Bytes — 3 SP1

HCS08 Cycles
Instruction Mnemonic
Addressing Mode

Chapter 9
Keyboard Interrupt (S08KBIV1)

9.1 Introduction

The MC9S08GBxxA/GTxxA has one KBI module with eight keyboard interrupt inputs that share port A pins. See Chapter 2, "Pins and Connections" for more information about the logic and hardware aspects of these pins.

9.1.1 Port A and Keyboard Interrupt Pins

MCU Pin:	PTA7/ KBI1P7	PTA6/ KBI1P6	PTA5/ KBI1P5	PTA4/ KBI1P4	PTA3/ KBI1P3	PTA2/ KBI1P2	PTA1/ KBI1P1	PTA0/ KBI1P0

Figure 9-1. Port A Pin Names

The following paragraphs discuss controlling the keyboard interrupt pins.

Port A is an 8-bit port which is shared among the KBI keyboard interrupt inputs and general-purpose I/O. The eight KBIPEn control bits in the KBIPE register allow selection of any combination of port A pins to be assigned as KBI inputs. Any pins which are enabled as KBI inputs will be forced to act as inputs and the remaining port A pins are available as general-purpose I/O pins controlled by the port A data (PTAD), data direction (PTADD), and pullup enable (PTAPE) registers.

KBI inputs can be configured for edge-only sensitivity or edge-and-level sensitivity. Bits 3 through 0 of port A are falling-edge/low-level sensitive while bits 7 through 4 can be configured for rising-edge/high-level or for falling-edge/low-level sensitivity.

The eight PTAPEn control bits in the PTAPE register allow you to select whether an internal pullup device is enabled on each port A pin that is configured as an input. When any of bits 7 through 4 of port A are enabled as KBI inputs and are configured to detect rising edges/high levels, the pullup enable bits enable pulldown rather than pullup devices.

An enabled keyboard interrupt can be used to wake the MCU from wait or standby (stop3).

9.2 Features

The keyboard interrupt (KBI) module features include:

- Keyboard interrupts selectable on eight port pins:
  - Four falling-edge/low-level sensitive
  - Four falling-edge/low-level or rising-edge/high-level sensitive
  - Choice of edge-only or edge-and-level sensitivity
  - Common interrupt flag and interrupt enable control
  - Capable of waking up the MCU from stop3 or wait mode

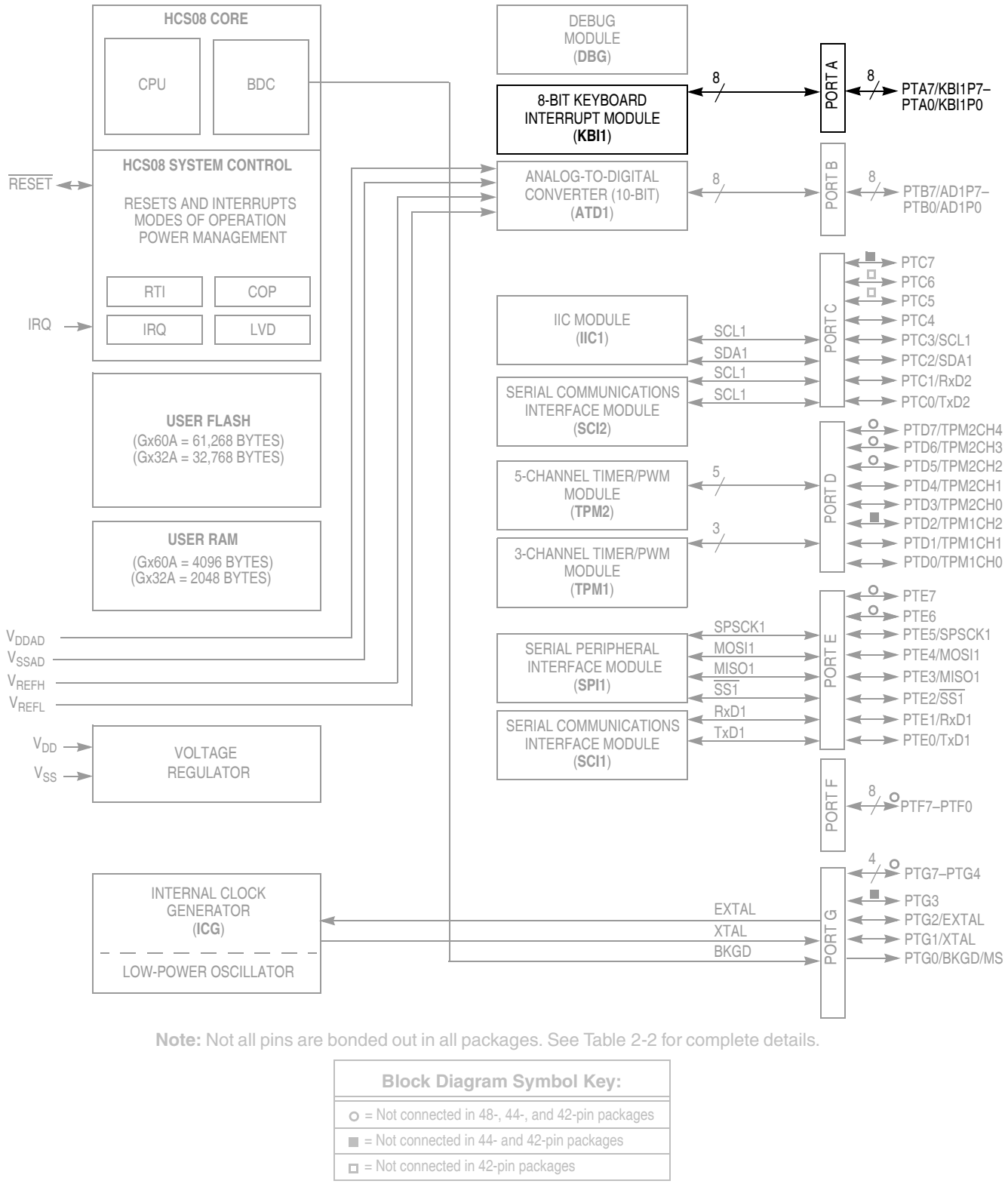

Figure 9-2. Block Diagram Highlighting KBI Module

9.2.1 KBI Block Diagram

Figure 9-3 shows the block diagram for a KBI module.

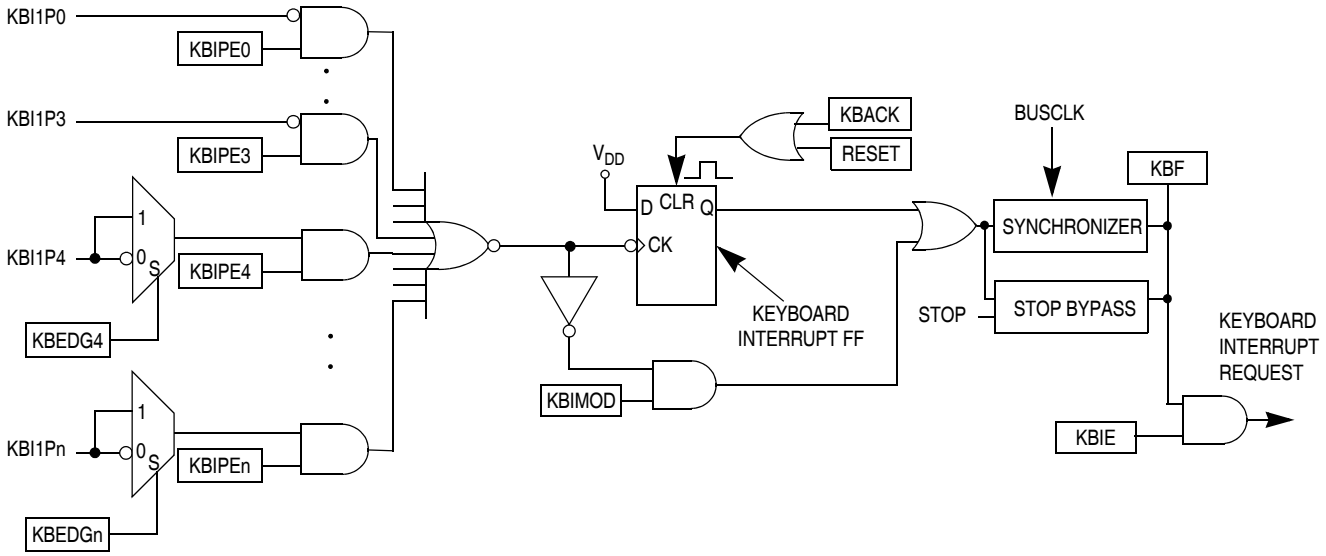

Figure 9-3. KBI Block Diagram

9.3 Register Definition

This section provides information about all registers and control bits associated with the KBI module.

Refer to the direct-page register summary in the Memory chapter of this data sheet for the absolute address assignments for all KBI registers. This section refers to registers and control bits only by their names. A Freescale-provided equate or header file is used to translate these names into the appropriate absolute addresses.

9.3.1 KBI Status and Control Register (KBI1SC)

	7	6	5	4	3	2	1	0
R	KBEDG7	KBEDG6	KBEDG5	KBEDG4	KBF	0	KBIE	KBIMOD
W						KBACK		
Reset	0	0	0	0	0	0	0	0

= Unimplemented or Reserved

Figure 9-4. KBI Status and Control Register (KBI1SC)

Table 9-1. KBI1SC Register Field Descriptions

Field	Description
7:4 KBEDG[7:4]	**Keyboard Edge Select for KBI Port Bits** — Each of these read/write bits selects the polarity of the edges and/or levels that are recognized as trigger events on the corresponding KBI port pin when it is configured as a keyboard interrupt input (KBIPEn = 1). Also see the KBIMOD control bit, which determines whether the pin is sensitive to edges-only or edges and levels. 0 Falling edges/low levels 1 Rising edges/high levels
3 KBF	**Keyboard Interrupt Flag** — This read-only status flag is set whenever the selected edge event has been detected on any of the enabled KBI port pins. This flag is cleared by writing a 1 to the KBACK control bit. The flag will remain set if KBIMOD = 1 to select edge-and-level operation and any enabled KBI port pin remains at the asserted level. KBF can be used as a software pollable flag (KBIE = 0) or it can generate a hardware interrupt request to the CPU (KBIE = 1). 0 No KBI interrupt pending 1 KBI interrupt pending
2 KBACK	**Keyboard Interrupt Acknowledge** — This write-only bit (reads always return 0) is used to clear the KBF status flag by writing a 1 to KBACK. When KBIMOD = 1 to select edge-and-level operation and any enabled KBI port pin remains at the asserted level, KBF is being continuously set so writing 1 to KBACK does not clear the KBF flag.
1 KBIE	**Keyboard Interrupt Enable** — This read/write control bit determines whether hardware interrupts are generated when the KBF status flag equals 1. When KBIE = 0, no hardware interrupts are generated, but KBF can still be used for software polling. 0 KBF does not generate hardware interrupts (use polling) 1 KBI hardware interrupt requested when KBF = 1
KBIMOD	**Keyboard Detection Mode** — This read/write control bit selects either edge-only detection or edge-and-level detection. KBI port bits 3 through 0 can detect falling edges-only or falling edges and low levels. KBI port bits 7 through 4 can be configured to detect either: • Rising edges-only or rising edges and high levels (KBEDGn = 1) • Falling edges-only or falling edges and low levels (KBEDGn = 0) 0 Edge-only detection 1 Edge-and-level detection

9.3.2 KBI Pin Enable Register (KBI1PE)

	7	6	5	4	3	2	1	0
R W	KBIPE7	KBIPE6	KBIPE5	KBIPE4	KBIPE3	KBIPE2	KBIPE1	KBIPE0
Reset	0	0	0	0	0	0	0	0

= Unimplemented or Reserved

Figure 9-5. KBI Pin Enable Register (KBI1PE)

Table 9-2. KBI1PE Register Field Descriptions

Field	Description
7:0 KBIPE[7:0]	**Keyboard Pin Enable for KBI Port Bits** — Each of these read/write bits selects whether the associated KBI port pin is enabled as a keyboard interrupt input or functions as a general-purpose I/O pin. 0 Bit n of KBI port is a general-purpose I/O pin not associated with the KBI 1 Bit n of KBI port enabled as a keyboard interrupt input

9.4 Functional Description

9.4.1 Pin Enables

The KBIPEn control bits in the KBI1PE register allow a user to enable (KBIPEn = 1) any combination of KBI-related port pins to be connected to the KBI module. Pins corresponding to 0s in KBI1PE are general-purpose I/O pins that are not associated with the KBI module.

9.4.2 Edge and Level Sensitivity

Synchronous logic is used to detect edges. Prior to detecting an edge, enabled keyboard inputs in a KBI module must be at the deasserted logic level.

A falling edge is detected when an enabled keyboard input signal is seen as a logic 1 (the deasserted level) during one bus cycle and then a logic 0 (the asserted level) during the next cycle.

A rising edge is detected when the input signal is seen as a logic 0 during one bus cycle and then a logic 1 during the next cycle.

The KBIMOD control bit can be set to reconfigure the detection logic so that it detects edges and levels. In KBIMOD = 1 mode, the KBF status flag becomes set when an edge is detected (when one or more enabled pins change from the deasserted to the asserted level while all other enabled pins remain at their deasserted levels), but the flag is continuously set (and cannot be cleared) as long as any enabled keyboard input pin remains at the asserted level. When the MCU enters stop mode, the synchronous edge-detection logic is bypassed (because clocks are stopped). In stop mode, KBI inputs act as asynchronous level-sensitive inputs so they can wake the MCU from stop mode.

9.4.3 KBI Interrupt Controls

The KBF status flag becomes set (1) when an edge event has been detected on any KBI input pin. If KBIE = 1 in the KBI1SC register, a hardware interrupt will be requested whenever KBF = 1. The KBF flag is cleared by writing a 1 to the keyboard acknowledge (KBACK) bit.

When KBIMOD = 0 (selecting edge-only operation), KBF is always cleared by writing 1 to KBACK. When KBIMOD = 1 (selecting edge-and-level operation), KBF cannot be cleared as long as any keyboard input is at its asserted level.

Chapter 10
Timer/PWM (S08TPMV1)

10.1 Introduction

The MC9S08GBxxA/GTxxA includes two independent timer/PWM (TPM) modules which support traditional input capture, output compare, or buffered edge-aligned pulse-width modulation (PWM) on each channel. A control bit in each TPM configures all channels in that timer to operate as center-aligned PWM functions. In each of these two TPMs, timing functions are based on a separate 16-bit counter with prescaler and modulo features to control frequency and range (period between overflows) of the time reference. This timing system is ideally suited for a wide range of control applications, and the center-aligned PWM capability on the 3-channel TPM extends the field of applications to motor control in small appliances.

The use of the fixed system clock, XCLK, as the clock source for either of the TPM modules allows the TPM prescaler to run using the oscillator rate divided by two (ICGERCLK/2). This clock source must be selected only if the ICG is configured in either FBE or FEE mode. In FBE mode, this selection is redundant because the BUSCLK frequency is the same as XCLK. In FEE mode, the proper conditions must be met for XCLK to equal ICGERCLK/2 (Section 7.3.9, “Fixed Frequency Clock”). Selecting XCLK as the clock source with the ICG in either FEI or SCM mode will result in the TPM being non-functional.

10.2 Features

The timer system in the MC9S08GBxxA includes a 3-channel TPM1 and a separate 5-channel TPM2; the timer system in the MC9S08GTxxA includes two 2-channel modules, TPM1 and TPM2. Timer system features include:

- A total of eight channels:
  - Each channel may be input capture, output compare, or buffered edge-aligned PWM
  - Rising-edge, falling-edge, or any-edge input capture trigger
  - Set, clear, or toggle output compare action
  - Selectable polarity on PWM outputs
- Each TPM may be configured for buffered, center-aligned pulse-width modulation (CPWM) on all channels
- Clock source to prescaler for each TPM is independently selectable as bus clock, fixed system clock, or an external pin
- Prescale taps for divide by 1, 2, 4, 8, 16, 32, 64, or 128
- 16-bit free-running or up/down (CPWM) count operation
- 16-bit modulus register to control counter range
- Timer system enable
- One interrupt per channel plus terminal count interrupt

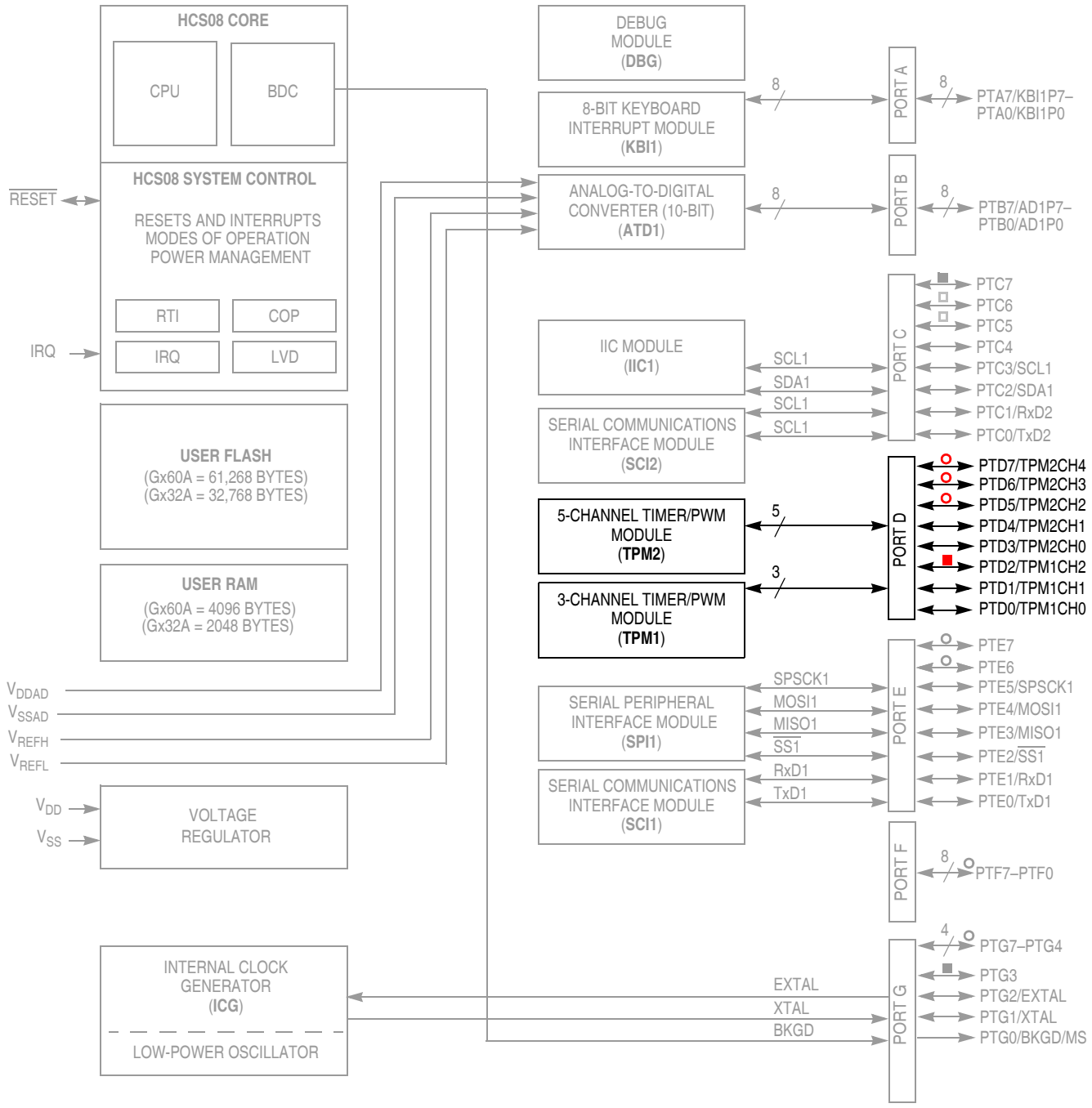

Note: Not all pins are bonded out in all packages. See Table 2-2 for complete details.

Block Diagram Symbol Key:
○ = Not connected in 48-, 44-, and 42-pin packages
■ = Not connected in 44- and 42-pin packages
□ = Not connected in 42-pin packages

Figure 10-1. Block Diagram Highlighting the TPM Modules

10.3 TPM Block Diagram

The TPM uses one input/output (I/O) pin per channel, TPMxCHn where x is the TPM number (for example, 1 or 2) and n is the channel number (for example, 0–4). The TPM shares its I/O pins with general-purpose I/O port pins (refer to the Pins and Connections chapter for more information). Figure 10-2 shows the structure of a TPM. Some MCUs include more than one TPM, with various numbers of channels.

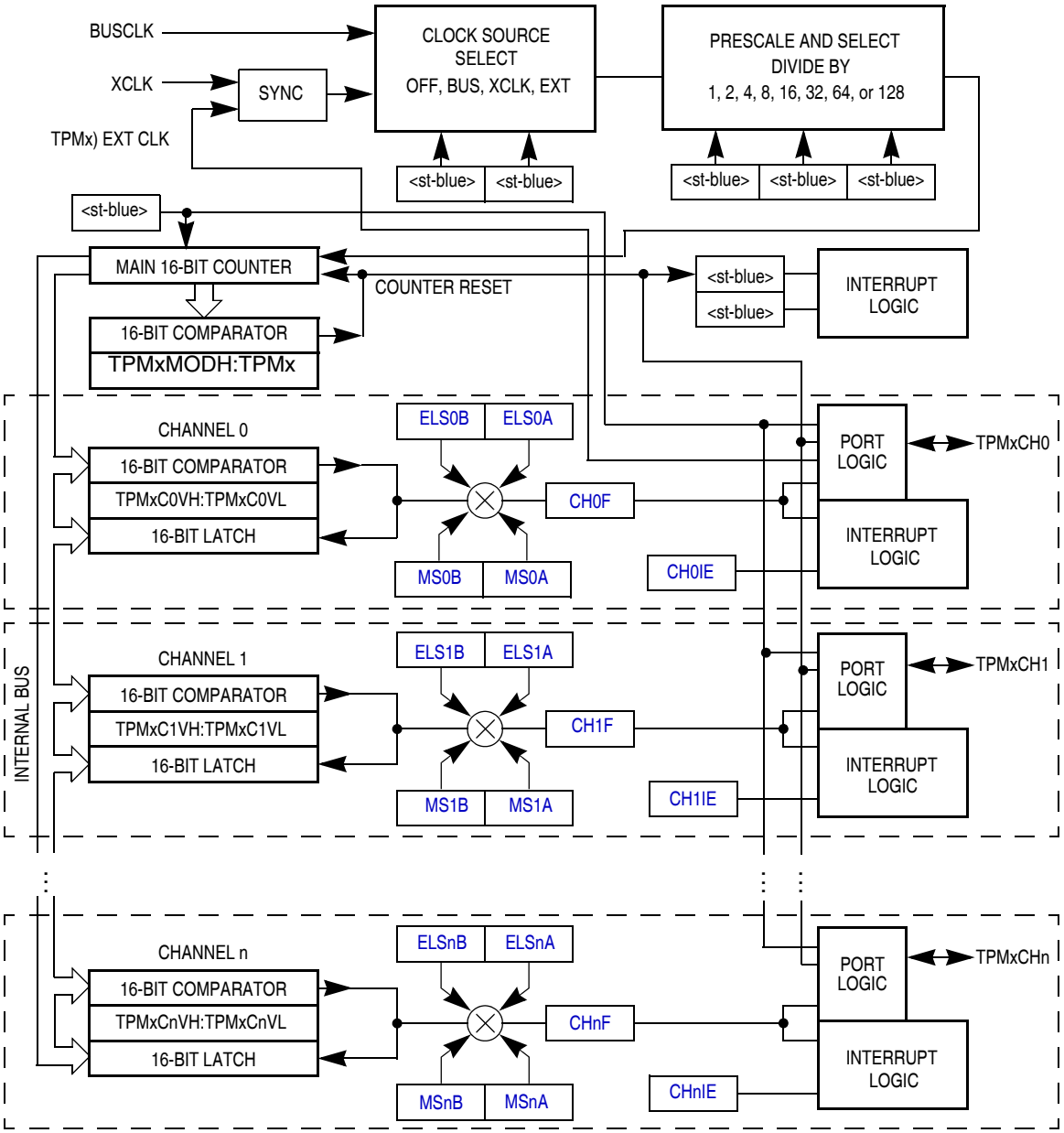

Figure 10-2. TPM Block Diagram

The central component of the TPM is the 16-bit counter that can operate as a free-running counter, a modulo counter, or an up-/down-counter when the TPM is configured for center-aligned PWM. The TPM

counter (when operating in normal up-counting mode) provides the timing reference for the input capture, output compare, and edge-aligned PWM functions. The timer counter modulo registers, TPMxMODH:TPMxMODL, control the modulo value of the counter. (The values $0000 or $FFFF effectively make the counter free running.) Software can read the counter value at any time without affecting the counting sequence. Any write to either byte of the TPMxCNT counter resets the counter regardless of the data value written.

All TPM channels are programmable independently as input capture, output compare, or buffered edge-aligned PWM channels.

10.4 Pin Descriptions

Table 10-2 shows the MCU pins related to the TPM modules. When TPMxCH0 is used as an external clock input, the associated TPM channel 0 can not use the pin. (Channel 0 can still be used in output compare mode as a software timer.) When any of the pins associated with the timer is configured as a timer input, a passive pullup can be enabled. After reset, the TPM modules are disabled and all pins default to general-purpose inputs with the passive pullups disabled.

10.4.1 External TPM Clock Sources

When control bits CLKSB:CLKSA in the timer status and control register are set to 1:1, the prescaler and consequently the 16-bit counter for TPMx are driven by an external clock source connected to the TPMxCH0 pin. A synchronizer is needed between the external clock and the rest of the TPM. This synchronizer is clocked by the bus clock so the frequency of the external source must be less than one-half the frequency of the bus rate clock. The upper frequency limit for this external clock source is specified to be one-fourth the bus frequency to conservatively accommodate duty cycle and phase-locked loop (PLL) or frequency-locked loop (FLL) frequency jitter effects.

When the TPM is using the channel 0 pin for an external clock, the corresponding ELS0B:ELS0A control bits should be set to 0:0 so channel 0 is not trying to use the same pin.

10.4.2 TPMxCHn — TPMx Channel n I/O Pins

Each TPM channel is associated with an I/O pin on the MCU. The function of this pin depends on the configuration of the channel. In some cases, no pin function is needed so the pin reverts to being controlled by general-purpose I/O controls. When a timer has control of a port pin, the port data and data direction registers do not affect the related pin(s). See the Pins and Connections chapter for additional information about shared pin functions.

10.5 Functional Description

All TPM functions are associated with a main 16-bit counter that allows flexible selection of the clock source and prescale divisor. A 16-bit modulo register also is associated with the main 16-bit counter in the TPM. Each TPM channel is optionally associated with an MCU pin and a maskable interrupt function.

The TPM has center-aligned PWM capabilities controlled by the CPWMS control bit in TPMxSC. When CPWMS is set to 1, timer counter TPMxCNT changes to an up-/down-counter and all channels in the

associated TPM act as center-aligned PWM channels. When CPWMS = 0, each channel can independently be configured to operate in input capture, output compare, or buffered edge-aligned PWM mode.

The following sections describe the main 16-bit counter and each of the timer operating modes (input capture, output compare, edge-aligned PWM, and center-aligned PWM). Because details of pin operation and interrupt activity depend on the operating mode, these topics are covered in the associated mode sections.

10.5.1 Counter

All timer functions are based on the main 16-bit counter (TPMxCNTH:TPMxCNTL). This section discusses selection of the clock source, up-counting vs. up-/down-counting, end-of-count overflow, and manual counter reset.

After any MCU reset, CLKSB:CLKSA = 0:0 so no clock source is selected and the TPM is inactive. Normally, CLKSB:CLKSA would be set to 0:1 so the bus clock drives the timer counter. The clock source for each of the TPM can be independently selected to be off, the bus clock (BUSCLK), the fixed system clock (XCLK), or an external input through the TPMxCH0 pin. The maximum frequency allowed for the external clock option is one-fourth the bus rate. Refer to Section 10.7.1, “Timer x Status and Control Register (TPMxSC),” and Table 10-2 for more information about clock source selection.

When the microcontroller is in active background mode, the TPM temporarily suspends all counting until the microcontroller returns to normal user operating mode. During stop mode, all TPM clocks are stopped; therefore, the TPM is effectively disabled until clocks resume. During wait mode, the TPM continues to operate normally.

The main 16-bit counter has two counting modes. When center-aligned PWM is selected (CPWMS = 1), the counter operates in up-/down-counting mode. Otherwise, the counter operates as a simple up-counter. As an up-counter, the main 16-bit counter counts from $0000 through its terminal count and then continues with $0000. The terminal count is $FFFF or a modulus value in TPMxMODH:TPMxMODL.

When center-aligned PWM operation is specified, the counter counts upward from $0000 through its terminal count and then counts downward to $0000 where it returns to up-counting. Both $0000 and the terminal count value (value in TPMxMODH:TPMxMODL) are normal length counts (one timer clock period long).

An interrupt flag and enable are associated with the main 16-bit counter. The timer overflow flag (TOF) is a software-accessible indication that the timer counter has overflowed. The enable signal selects between software polling (TOIE = 0) where no hardware interrupt is generated, or interrupt-driven operation (TOIE = 1) where a static hardware interrupt is automatically generated whenever the TOF flag is 1.

The conditions that cause TOF to become set depend on the counting mode (up or up/down). In up-counting mode, the main 16-bit counter counts from $0000 through $FFFF and overflows to $0000 on the next counting clock. TOF becomes set at the transition from $FFFF to $0000. When a modulus limit is set, TOF becomes set at the transition from the value set in the modulus register to $0000. When the main 16-bit counter is operating in up-/down-counting mode, the TOF flag gets set as the counter changes direction at the transition from the value set in the modulus register and the next lower count value. This corresponds to the end of a PWM period. (The $0000 count value corresponds to the center of a period.)

Because the HCS08 MCU is an 8-bit architecture, a coherency mechanism is built into the timer counter for read operations. Whenever either byte of the counter is read (TPMxCNTH or TPMxCNTL), both bytes are captured into a buffer so when the other byte is read, the value will represent the other byte of the count at the time the first byte was read. The counter continues to count normally, but no new value can be read from either byte until both bytes of the old count have been read.

The main timer counter can be reset manually at any time by writing any value to either byte of the timer count TPMxCNTH or TPMxCNTL. Resetting the counter in this manner also resets the coherency mechanism in case only one byte of the counter was read before resetting the count.

10.5.2 Channel Mode Selection

Provided CPWMS = 0 (center-aligned PWM operation is not specified), the MSnB and MSnA control bits in the channel n status and control registers determine the basic mode of operation for the corresponding channel. Choices include input capture, output compare, and buffered edge-aligned PWM.

10.5.2.1 Input Capture Mode

With the input capture function, the TPM can capture the time at which an external event occurs. When an active edge occurs on the pin of an input capture channel, the TPM latches the contents of the TPM counter into the channel value registers (TPMxCnVH:TPMxCnVL). Rising edges, falling edges, or any edge may be chosen as the active edge that triggers an input capture.

When either byte of the 16-bit capture register is read, both bytes are latched into a buffer to support coherent 16-bit accesses regardless of order. The coherency sequence can be manually reset by writing to the channel status/control register (TPMxCnSC).

An input capture event sets a flag bit (CHnF) that can optionally generate a CPU interrupt request.

10.5.2.2 Output Compare Mode

With the output compare function, the TPM can generate timed pulses with programmable position, polarity, duration, and frequency. When the counter reaches the value in the channel value registers of an output compare channel, the TPM can set, clear, or toggle the channel pin.

In output compare mode, values are transferred to the corresponding timer channel value registers only after both 8-bit bytes of a 16-bit register have been written. This coherency sequence can be manually reset by writing to the channel status/control register (TPMxCnSC).

An output compare event sets a flag bit (CHnF) that can optionally generate a CPU interrupt request.

10.5.2.3 Edge-Aligned PWM Mode

This type of PWM output uses the normal up-counting mode of the timer counter (CPWMS = 0) and can be used when other channels in the same TPM are configured for input capture or output compare functions. The period of this PWM signal is determined by the setting in the modulus register (TPMxMODH:TPMxMODL). The duty cycle is determined by the setting in the timer channel value

register (TPMxCnVH:TPMxCnVL). The polarity of this PWM signal is determined by the setting in the ELSnA control bit. Duty cycle cases of 0 percent and 100 percent are possible.

As Figure 10-3 shows, the output compare value in the TPM channel registers determines the pulse width (duty cycle) of the PWM signal. The time between the modulus overflow and the output compare is the pulse width. If ELSnA = 0, the counter overflow forces the PWM signal high and the output compare forces the PWM signal low. If ELSnA = 1, the counter overflow forces the PWM signal low and the output compare forces the PWM signal high.

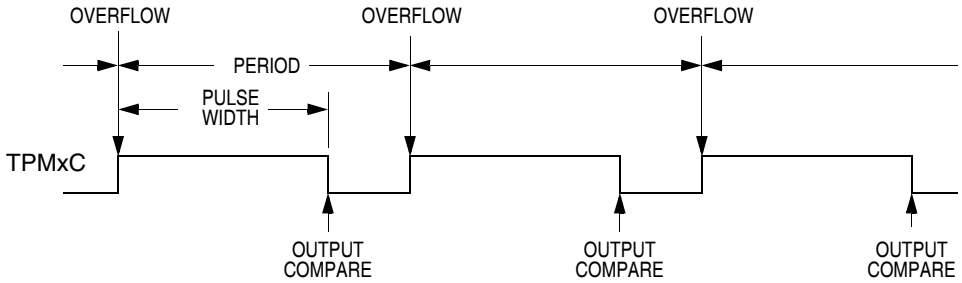

Figure 10-3. PWM Period and Pulse Width (ELSnA = 0)

When the channel value register is set to $0000, the duty cycle is 0 percent. By setting the timer channel value register (TPMxCnVH:TPMxCnVL) to a value greater than the modulus setting, 100 percent duty cycle can be achieved. This implies that the modulus setting must be less than $FFFF to get 100 percent duty cycle.

Because the HCS08 is a family of 8-bit MCUs, the settings in the timer channel registers are buffered to ensure coherent 16-bit updates and to avoid unexpected PWM pulse widths. Writes to either register, TPMxCnVH or TPMxCnVL, write to buffer registers. In edge-PWM mode, values are transferred to the corresponding timer channel registers only after both 8-bit bytes of a 16-bit register have been written and the value in the TPMxCNTH:TPMxCNTL counter is $0000. (The new duty cycle does not take effect until the next full period.)

10.5.3 Center-Aligned PWM Mode

This type of PWM output uses the up-/down-counting mode of the timer counter (CPWMS = 1). The output compare value in TPMxCnVH:TPMxCnVL determines the pulse width (duty cycle) of the PWM signal and the period is determined by the value in TPMxMODH:TPMxMODL. TPMxMODH:TPMxMODL should be kept in the range of $0001 to $7FFF because values outside this range can produce ambiguous results. ELSnA will determine the polarity of the CPWM output.

pulse width = 2 x (TPMxCnVH:TPMxCnVL) ***Eqn. 10-1***

period = 2 x (TPMxMODH:TPMxMODL);
for TPMxMODH:TPMxMODL = $0001–$7FFF ***Eqn. 10-2***

If the channel value register TPMxCnVH:TPMxCnVL is zero or negative (bit 15 set), the duty cycle will be 0 percent. If TPMxCnVH:TPMxCnVL is a positive value (bit 15 clear) and is greater than the (nonzero) modulus setting, the duty cycle will be 100 percent because the duty cycle compare will never occur. This implies the usable range of periods set by the modulus register is $0001 through $7FFE ($7FFF if

generation of 100 percent duty cycle is not necessary). This is not a significant limitation because the resulting period is much longer than required for normal applications.

TPMxMODH:TPMxMODL = $0000 is a special case that should not be used with center-aligned PWM mode. When CPWMS = 0, this case corresponds to the counter running free from $0000 through $FFFF, but when CPWMS = 1 the counter needs a valid match to the modulus register somewhere other than at $0000 in order to change directions from up-counting to down-counting.

Figure 10-4 shows the output compare value in the TPM channel registers (multiplied by 2), which determines the pulse width (duty cycle) of the CPWM signal. If ELSnA = 0, the compare match while counting up forces the CPWM output signal low and a compare match while counting down forces the output high. The counter counts up until it reaches the modulo setting in TPMxMODH:TPMxMODL, then counts down until it reaches zero. This sets the period equal to two times TPMxMODH:TPMxMODL.

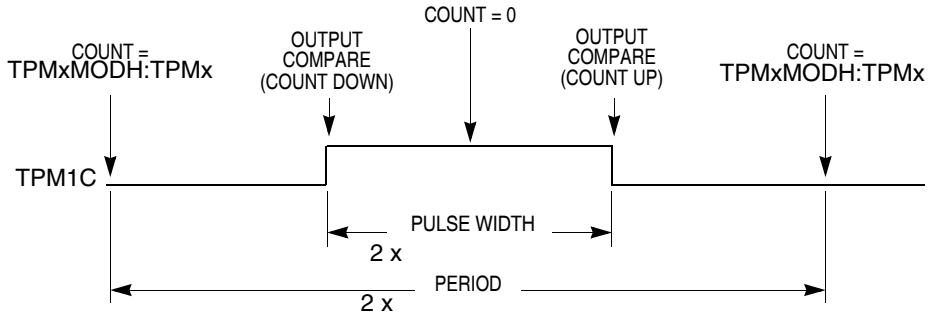

Figure 10-4. CPWM Period and Pulse Width (ELSnA = 0)

Center-aligned PWM outputs typically produce less noise than edge-aligned PWMs because fewer I/O pin transitions are lined up at the same system clock edge. This type of PWM is also required for some types of motor drives.

Because the HCS08 is a family of 8-bit MCUs, the settings in the timer channel registers are buffered to ensure coherent 16-bit updates and to avoid unexpected PWM pulse widths. Writes to any of the registers, TPMxMODH, TPMxMODL, TPMxCnVH, and TPMxCnVL, actually write to buffer registers. Values are transferred to the corresponding timer channel registers only after both 8-bit bytes of a 16-bit register have been written and the timer counter overflows (reverses direction from up-counting to down-counting at the end of the terminal count in the modulus register). This TPMxCNT overflow requirement only applies to PWM channels, not output compares.

Optionally, when TPMxCNTH:TPMxCNTL = TPMxMODH:TPMxMODL, the TPM can generate a TOF interrupt at the end of this count. The user can choose to reload any number of the PWM buffers, and they will all update simultaneously at the start of a new period.

Writing to TPMxSC cancels any values written to TPMxMODH and/or TPMxMODL and resets the coherency mechanism for the modulo registers. Writing to TPMxCnSC cancels any values written to the channel value registers and resets the coherency mechanism for TPMxCnVH:TPMxCnVL.

10.6 TPM Interrupts

The TPM generates an optional interrupt for the main counter overflow and an interrupt for each channel. The meaning of channel interrupts depends on the mode of operation for each channel. If the channel is configured for input capture, the interrupt flag is set each time the selected input capture edge is recognized. If the channel is configured for output compare or PWM modes, the interrupt flag is set each time the main timer counter matches the value in the 16-bit channel value register. See the Resets, Interrupts, and System Configuration chapter for absolute interrupt vector addresses, priority, and local interrupt mask control bits.

For each interrupt source in the TPM, a flag bit is set on recognition of the interrupt condition such as timer overflow, channel input capture, or output compare events. This flag may be read (polled) by software to verify that the action has occurred, or an associated enable bit (TOIE or CHnIE) can be set to enable hardware interrupt generation. While the interrupt enable bit is set, a static interrupt will be generated whenever the associated interrupt flag equals 1. It is the responsibility of user software to perform a sequence of steps to clear the interrupt flag before returning from the interrupt service routine.

10.6.1 Clearing Timer Interrupt Flags

TPM interrupt flags are cleared by a 2-step process that includes a read of the flag bit while it is set (1) followed by a write of 0 to the bit. If a new event is detected between these two steps, the sequence is reset and the interrupt flag remains set after the second step to avoid the possibility of missing the new event.

10.6.2 Timer Overflow Interrupt Description

The conditions that cause TOF to become set depend on the counting mode (up or up/down). In up-counting mode, the 16-bit timer counter counts from $0000 through $FFFF and overflows to $0000 on the next counting clock. TOF becomes set at the transition from $FFFF to $0000. When a modulus limit is set, TOF becomes set at the transition from the value set in the modulus register to $0000. When the counter is operating in up-/down-counting mode, the TOF flag gets set as the counter changes direction at the transition from the value set in the modulus register and the next lower count value. This corresponds to the end of a PWM period. (The $0000 count value corresponds to the center of a period.)

10.6.3 Channel Event Interrupt Description

The meaning of channel interrupts depends on the current mode of the channel (input capture, output compare, edge-aligned PWM, or center-aligned PWM).

When a channel is configured as an input capture channel, the ELSnB:ELSnA control bits select rising edges, falling edges, any edge, or no edge (off) as the edge that triggers an input capture event. When the selected edge is detected, the interrupt flag is set. The flag is cleared by the 2-step sequence described in Section 10.6.1, “Clearing Timer Interrupt Flags.”

When a channel is configured as an output compare channel, the interrupt flag is set each time the main timer counter matches the 16-bit value in the channel value register. The flag is cleared by the 2-step sequence described in Section 10.6.1, “Clearing Timer Interrupt Flags.”

10.6.4 PWM End-of-Duty-Cycle Events

For channels that are configured for PWM operation, there are two possibilities:

- When the channel is configured for edge-aligned PWM, the channel flag is set when the timer counter matches the channel value register that marks the end of the active duty cycle period.
- When the channel is configured for center-aligned PWM, the timer count matches the channel value register twice during each PWM cycle. In this CPWM case, the channel flag is set at the start and at the end of the active duty cycle, which are the times when the timer counter matches the channel value register.

The flag is cleared by the 2-step sequence described in Section 10.6.1, “Clearing Timer Interrupt Flags.”

10.7 TPM Registers and Control Bits

The TPM includes:

- An 8-bit status and control register (TPMxSC)
- A 16-bit counter (TPMxCNTH:TPMxCNTL)
- A 16-bit modulo register (TPMxMODH:TPMxMODL)

Each timer channel has:

- An 8-bit status and control register (TPMxCnSC)
- A 16-bit channel value register (TPMxCnVH:TPMxCnVL)

Refer to the direct-page register summary in the Memory chapter of this data sheet for the absolute address assignments for all TPM registers. This section refers to registers and control bits only by their names. A Freescale-provided equate or header file is used to translate these names into the appropriate absolute addresses.

Some MCU systems have more than one TPM, so register names include placeholder characters to identify which TPM and which channel is being referenced. For example, TPMxCnSC refers to timer (TPM) x, channel n and TPM1C2SC is the status and control register for timer 1, channel 2.

10.7.1 Timer x Status and Control Register (TPMxSC)

TPMxSC contains the overflow status flag and control bits that are used to configure the interrupt enable, TPM configuration, clock source, and prescale divisor. These controls relate to all channels within this timer module.

	7	6	5	4	3	2	1	0
R	TOF	TOIE	CPWMS	CLKSB	CLKSA	PS2	PS1	PS0
W								
Reset	0	0	0	0	0	0	0	0

= Unimplemented or Reserved

Figure 10-5. Timer x Status and Control Register (TPMxSC)

Table 10-1. TPMxSC Register Field Descriptions

Field	Description
7 TOF	**Timer Overflow Flag** — This flag is set when the TPM counter changes to $0000 after reaching the modulo value programmed in the TPM counter modulo registers. When the TPM is configured for CPWM, TOF is set after the counter has reached the value in the modulo register, at the transition to the next lower count value. Clear TOF by reading the TPM status and control register when TOF is set and then writing a 0 to TOF. If another TPM overflow occurs before the clearing sequence is complete, the sequence is reset so TOF would remain set after the clear sequence was completed for the earlier TOF. Reset clears TOF. Writing a 1 to TOF has no effect. 0 TPM counter has not reached modulo value or overflow 1 TPM counter has overflowed
6 TOIE	**Timer Overflow Interrupt Enable** — This read/write bit enables TPM overflow interrupts. If TOIE is set, an interrupt is generated when TOF equals 1. Reset clears TOIE. 0 TOF interrupts inhibited (use software polling) 1 TOF interrupts enabled
5 CPWMS	**Center-Aligned PWM Select** — This read/write bit selects CPWM operating mode. Reset clears this bit so the TPM operates in up-counting mode for input capture, output compare, and edge-aligned PWM functions. Setting CPWMS reconfigures the TPM to operate in up-/down-counting mode for CPWM functions. Reset clears CPWMS. 0 All TPMx channels operate as input capture, output compare, or edge-aligned PWM mode as selected by the MSnB:MSnA control bits in each channel's status and control register 1 All TPMx channels operate in center-aligned PWM mode
4:3 CLKS[B:A]	**Clock Source Select** — As shown in Table 10-2, this 2-bit field is used to disable the TPM system or select one of three clock sources to drive the counter prescaler. The external source and the XCLK are synchronized to the bus clock by an on-chip synchronization circuit.
2:0 PS[2:0]	**Prescale Divisor Select** — This 3-bit field selects one of eight divisors for the TPM clock input as shown in Table 10-3. This prescaler is located after any clock source synchronization or clock source selection, so it affects whatever clock source is selected to drive the TPM system.

Table 10-2. TPM Clock Source Selection

CLKSB:CLKSA	TPM Clock Source to Prescaler Input
0:0	No clock selected (TPM disabled)
0:1	Bus rate clock (BUSCLK)
1:0	Fixed system clock (XCLK)
1:1	External source (TPMx Ext Clk)[1,2]

1. The maximum frequency that is allowed as an external clock is one-fourth of the bus frequency.
2. When the TPMxCH0 pin is selected as the TPM clock source, the corresponding ELS0B:ELS0A control bits should be set to 0:0 so channel 0 does not try to use the same pin for a conflicting function.

Table 10-3. Prescale Divisor Selection

PS2:PS1:PS0	TPM Clock Source Divided-By
0:0:0	1
0:0:1	2
0:1:0	4
0:1:1	8
1:0:0	16
1:0:1	32
1:1:0	64
1:1:1	128

10.7.2 Timer x Counter Registers (TPMxCNTH:TPMxCNTL)

The two read-only TPM counter registers contain the high and low bytes of the value in the TPM counter. Reading either byte (TPMxCNTH or TPMxCNTL) latches the contents of both bytes into a buffer where they remain latched until the other byte is read. This allows coherent 16-bit reads in either order. The coherency mechanism is automatically restarted by an MCU reset, a write of any value to TPMxCNTH or TPMxCNTL, or any write to the timer status/control register (TPMxSC).

Reset clears the TPM counter registers.

	7	6	5	4	3	2	1	0
R	Bit 15	14	13	12	11	10	9	Bit 8
W	Any write to TPMxCNTH clears the 16-bit counter.							
Reset	0	0	0	0	0	0	0	0

Figure 10-6. Timer x Counter Register High (TPMxCNTH)

	7	6	5	4	3	2	1	0
R	Bit 7	6	5	4	3	2	1	Bit 0
W	Any write to TPMxCNTL clears the 16-bit counter.							
Reset	0	0	0	0	0	0	0	0

Figure 10-7. Timer x Counter Register Low (TPMxCNTL)

When background mode is active, the timer counter and the coherency mechanism are frozen such that the buffer latches remain in the state they were in when the background mode became active even if one or both bytes of the counter are read while background mode is active.

10.7.3 Timer x Counter Modulo Registers (TPMxMODH:TPMxMODL)

The read/write TPM modulo registers contain the modulo value for the TPM counter. After the TPM counter reaches the modulo value, the TPM counter resumes counting from $0000 at the next clock (CPWMS = 0) or starts counting down (CPWMS = 1), and the overflow flag (TOF) becomes set. Writing to TPMxMODH or TPMxMODL inhibits the TOF bit and overflow interrupts until the other byte is written. Reset sets the TPM counter modulo registers to $0000, which results in a free-running timer counter (modulo disabled).

	7	6	5	4	3	2	1	0
R W	Bit 15	14	13	12	11	10	9	Bit 8
Reset	0	0	0	0	0	0	0	0

Figure 10-8. Timer x Counter Modulo Register High (TPMxMODH)

	7	6	5	4	3	2	1	0
R W	Bit 7	6	5	4	3	2	1	Bit 0
Reset	0	0	0	0	0	0	0	0

Figure 10-9. Timer x Counter Modulo Register Low (TPMxMODL)

It is good practice to wait for an overflow interrupt so both bytes of the modulo register can be written well before a new overflow. An alternative approach is to reset the TPM counter before writing to the TPM modulo registers to avoid confusion about when the first counter overflow will occur.

10.7.4 Timer x Channel n Status and Control Register (TPMxCnSC)

TPMxCnSC contains the channel interrupt status flag and control bits that are used to configure the interrupt enable, channel configuration, and pin function.

	7	6	5	4	3	2	1	0
R	CHnF	CHnIE	MSnB	MSnA	ELSnB	ELSnA	0	0
W								
Reset	0	0	0	0	0	0	0	0

= Unimplemented or Reserved

Figure 10-10. Timer x Channel n Status and Control Register (TPMxCnSC)

Table 10-4. TPMxCnSC Register Field Descriptions

Field	Description
7 CHnF	**Channel n Flag** — When channel n is configured for input capture, this flag bit is set when an active edge occurs on the channel n pin. When channel n is an output compare or edge-aligned PWM channel, CHnF is set when the value in the TPM counter registers matches the value in the TPM channel n value registers. This flag is seldom used with center-aligned PWMs because it is set every time the counter matches the channel value register, which correspond to both edges of the active duty cycle period. A corresponding interrupt is requested when CHnF is set and interrupts are enabled (CHnIE = 1). Clear CHnF by reading TPMxCnSC while CHnF is set and then writing a 0 to CHnF. If another interrupt request occurs before the clearing sequence is complete, the sequence is reset so CHnF would remain set after the clear sequence was completed for the earlier CHnF. This is done so a CHnF interrupt request cannot be lost by clearing a previous CHnF. Reset clears CHnF. Writing a 1 to CHnF has no effect. 0 No input capture or output compare event occurred on channel n 1 Input capture or output compare event occurred on channel n
6 CHnIE	**Channel n Interrupt Enable** — This read/write bit enables interrupts from channel n. Reset clears CHnIE. 0 Channel n interrupt requests disabled (use software polling) 1 Channel n interrupt requests enabled
5 MSnB	**Mode Select B for TPM Channel n** — When CPWMS = 0, MSnB = 1 configures TPM channel n for edge-aligned PWM mode. For a summary of channel mode and setup controls, refer to Table 10-5.
4 MSnA	**Mode Select A for TPM Channel n** — When CPWMS = 0 and MSnB = 0, MSnA configures TPM channel n for input capture mode or output compare mode. Refer to Table 10-5 for a summary of channel mode and setup controls.
3:2 ELSn[B:A]	**Edge/Level Select Bits** — Depending on the operating mode for the timer channel as set by CPWMS:MSnB:MSnA and shown in Table 10-5, these bits select the polarity of the input edge that triggers an input capture event, select the level that will be driven in response to an output compare match, or select the polarity of the PWM output. Setting ELSnB:ELSnA to 0:0 configures the related timer pin as a general-purpose I/O pin unrelated to any timer channel functions. This function is typically used to temporarily disable an input capture channel or to make the timer pin available as a general-purpose I/O pin when the associated timer channel is set up as a software timer that does not require the use of a pin. This is also the setting required for channel 0 when the TPMxCH0 pin is used as an external clock input.

Table 10-5. Mode, Edge, and Level Selection

CPWMS	MSnB:MSnA	ELSnB:ELSnA	Mode	Configuration
X	XX	00	Pin not used for TPM channel; use as an external clock for the TPM or revert to general-purpose I/O	
0	00	01	Input capture	Capture on rising edge only
		10		Capture on falling edge only
		11		Capture on rising or falling edge
	01	00	Output compare	Software compare only
		01		Toggle output on compare
		10		Clear output on compare
		11		Set output on compare
	1X	10	Edge-aligned PWM	High-true pulses (clear output on compare)
		X1		Low-true pulses (set output on compare)
1	XX	10	Center-aligned PWM	High-true pulses (clear output on compare-up)
		X1		Low-true pulses (set output on compare-up)

If the associated port pin is not stable for at least two bus clock cycles before changing to input capture mode, it is possible to get an unexpected indication of an edge trigger. Typically, a program would clear status flags after changing channel configuration bits and before enabling channel interrupts or using the status flags to avoid any unexpected behavior.

10.7.5 Timer x Channel Value Registers (TPMxCnVH:TPMxCnVL)

These read/write registers contain the captured TPM counter value of the input capture function or the output compare value for the output compare or PWM functions. The channel value registers are cleared by reset.

	7	6	5	4	3	2	1	0
R W	Bit 15	14	13	12	11	10	9	Bit 8
Reset	0	0	0	0	0	0	0	0

Figure 10-11. Timer x Channel Value Register High (TPMxCnVH)

	7	6	5	4	3	2	1	0
R W	Bit 7	6	5	4	3	2	1	Bit 0
Reset	0	0	0	0	0	0	0	0

Figure 10-12. Timer Channel Value Register Low (TPMxCnVL)

In input capture mode, reading either byte (TPMxCnVH or TPMxCnVL) latches the contents of both bytes into a buffer where they remain latched until the other byte is read. This latching mechanism also resets (becomes unlatched) when the TPMxCnSC register is written.

In output compare or PWM modes, writing to either byte (TPMxCnVH or TPMxCnVL) latches the value into a buffer. When both bytes have been written, they are transferred as a coherent 16-bit value into the timer channel value registers. This latching mechanism may be manually reset by writing to the TPMxCnSC register.

This latching mechanism allows coherent 16-bit writes in either order, which is friendly to various compiler implementations.

Chapter 11
Serial Communications Interface (S08SCIV1)

11.1 Introduction

The MC9S08GBxxA/GTxxA includes two independent serial communications interface (SCI) modules — sometimes called universal asynchronous receiver/transmitters (UARTs). Typically, these systems are used to connect to the RS232 serial input/output (I/O) port of a personal computer or workstation, and they can also be used to communicate with other embedded controllers.

A flexible, 13-bit, modulo-based baud rate generator supports a broad range of standard baud rates beyond 115.2 kbaud. Transmit and receive within the same SCI use a common baud rate, and each SCI module has a separate baud rate generator.

This SCI system offers many advanced features not commonly found on other asynchronous serial I/O peripherals on other embedded controllers. The receiver employs an advanced data sampling technique that ensures reliable communication and noise detection. Hardware parity, receiver wakeup, and double buffering on transmit and receive are also included.

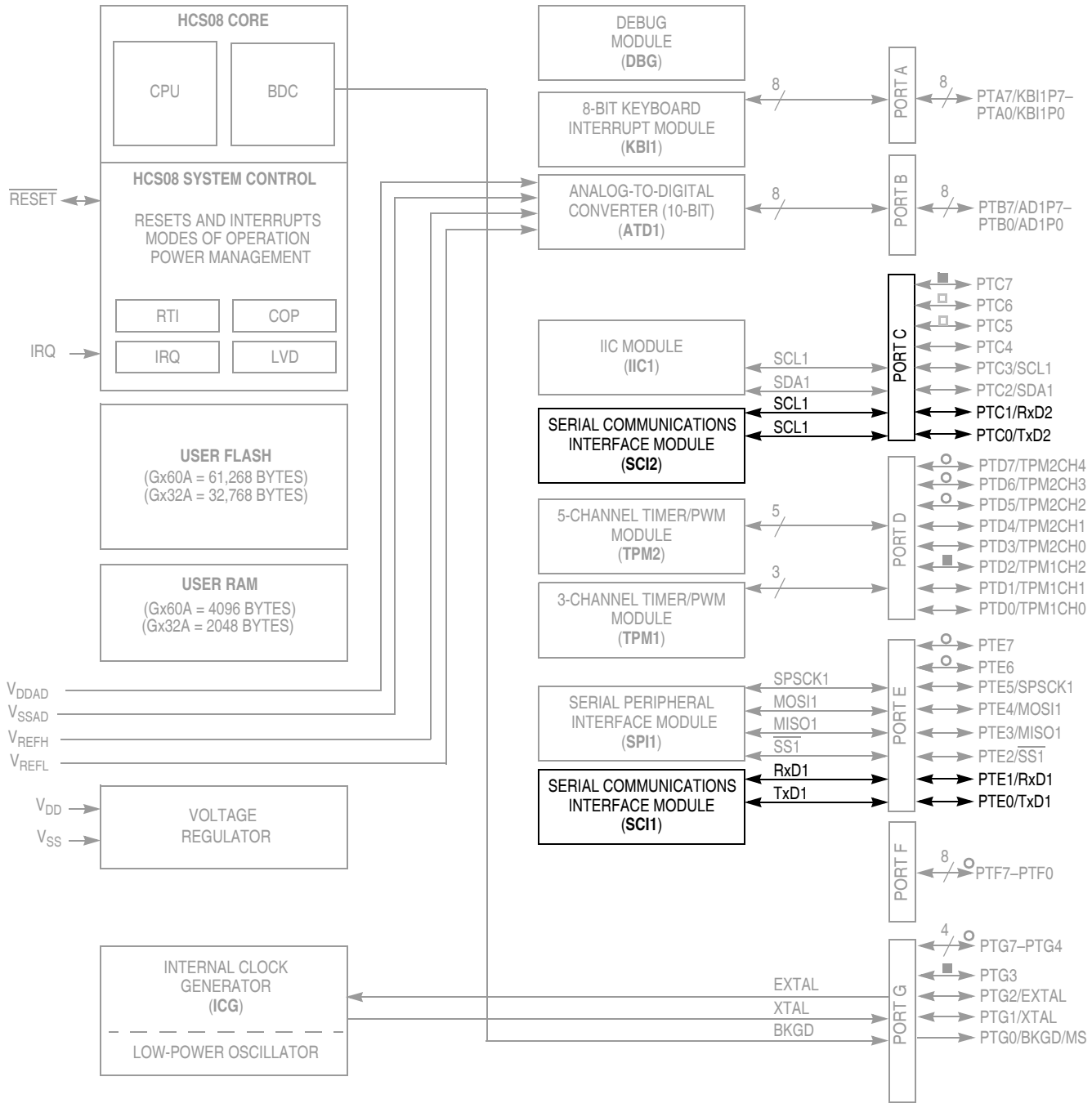

Figure 11-1. Block Diagram Highlighting the SCI Modules

11.1.1 Features

Features of SCI module include:

- Full-duplex, standard non-return-to-zero (NRZ) format
- Double-buffered transmitter and receiver with separate enables
- Programmable baud rates (13-bit modulo divider)
- Interrupt-driven or polled operation:
  - Transmit data register empty and transmission complete
  - Receive data register full
  - Receive overrun, parity error, framing error, and noise error
  - Idle receiver detect
- Hardware parity generation and checking
- Programmable 8-bit or 9-bit character length
- Receiver wakeup by idle-line or address-mark

11.1.2 Modes of Operation

See Section 11.3, “Functional Description,” for a detailed description of SCI operation in the different modes.

- 8- and 9- bit data modes
- Stop modes — SCI is halted during all stop modes
- Loop modes

11.1.3 Block Diagram

Figure 11-2 shows the transmitter portion of the SCI. (Figure 11-3 shows the receiver portion of the SCI.)

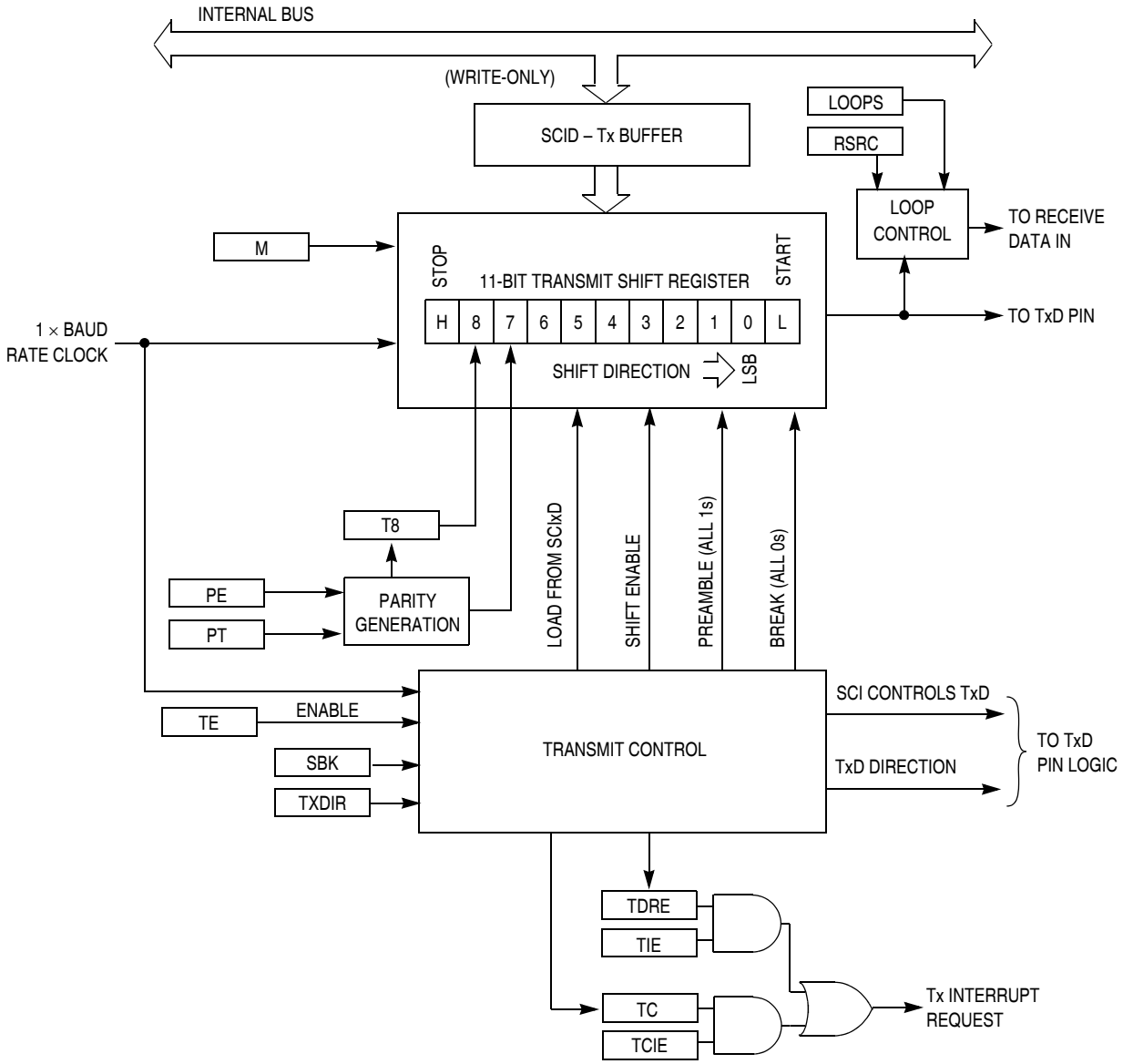

Figure 11-2. SCI Transmitter Block Diagram

Figure 11-3 shows the receiver portion of the SCI.

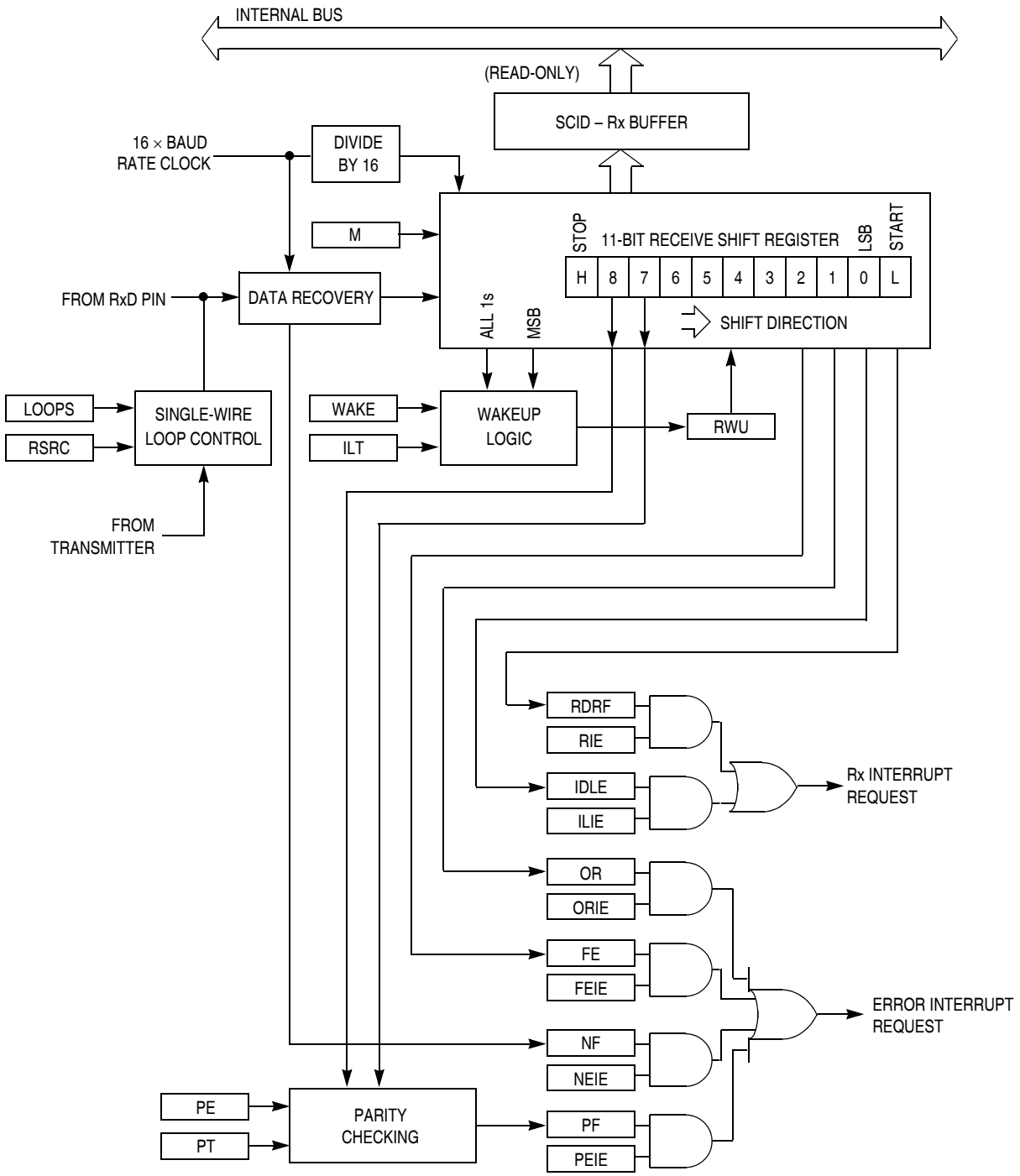

Figure 11-3. SCI Receiver Block Diagram

11.2 Register Definition

The SCI has eight 8-bit registers to control baud rate, select SCI options, report SCI status, and for transmit/receive data.

Refer to the direct-page register summary in the Memory chapter of this data sheet for the absolute address assignments for all SCI registers. This section refers to registers and control bits only by their names. A Freescale-provided equate or header file is used to translate these names into the appropriate absolute addresses.

11.2.1 SCI Baud Rate Registers (SCIxBDH, SCIxBHL)

This pair of registers controls the prescale divisor for SCI baud rate generation. To update the 13-bit baud rate setting [SBR12:SBR0], first write to SCIxBDH to buffer the high half of the new value and then write to SCIxBDL. The working value in SCIxBDH does not change until SCIxBDL is written.

SCIxBDL is reset to a non-zero value, so after reset the baud rate generator remains disabled until the first time the receiver or transmitter is enabled (RE or TE bits in SCIxC2 are written to 1).

	7	6	5	4	3	2	1	0
R	0	0	0	SBR12	SBR11	SBR10	SBR9	SBR8
W								
Reset	0	0	0	0	0	0	0	0

= Unimplemented or Reserved

Figure 11-4. SCI Baud Rate Register (SCIxBDH)

Table 11-1. SCIxBDH Register Field Descriptions

Field	Description
4:0 SBR[12:8]	**Baud Rate Modulo Divisor** — These 13 bits are referred to collectively as BR, and they set the modulo divide rate for the SCI baud rate generator. When BR = 0, the SCI baud rate generator is disabled to reduce supply current. When BR = 1 to 8191, the SCI baud rate = BUSCLK/(16×BR). See also BR bits in Table 11-2.

	7	6	5	4	3	2	1	0
R W	SBR7	SBR6	SBR5	SBR4	SBR3	SBR2	SBR1	SBR0
Reset	0	0	0	0	0	1	0	0

Figure 11-5. SCI Baud Rate Register (SCIxBDL)

Table 11-2. SCIxBDL Register Field Descriptions

Field	Description
7:0 SBR[7:0]	**Baud Rate Modulo Divisor** — These 13 bits are referred to collectively as BR, and they set the modulo divide rate for the SCI baud rate generator. When BR = 0, the SCI baud rate generator is disabled to reduce supply current. When BR = 1 to 8191, the SCI baud rate = BUSCLK/(16×BR). See also BR bits in Table 11-1.

11.2.2 SCI Control Register 1 (SCIxC1)

This read/write register is used to control various optional features of the SCI system.

	7	6	5	4	3	2	1	0
R W	LOOPS	SCISWAI	RSRC	M	WAKE	ILT	PE	PT
Reset	0	0	0	0	0	0	0	0

Figure 11-6. SCI Control Register 1 (SCIxC1)

Table 11-3. SCIxC1 Register Field Descriptions

Field	Description
7 LOOPS	**Loop Mode Select** — Selects between loop back modes and normal 2-pin full-duplex modes. When LOOPS = 1, the transmitter output is internally connected to the receiver input. 0 Normal operation — RxD and TxD use separate pins. 1 Loop mode or single-wire mode where transmitter outputs are internally connected to receiver input. (See RSRC bit.) RxD pin is not used by SCI.
6 SCISWAI	**SCI Stops in Wait Mode** 0 SCI clocks continue to run in wait mode so the SCI can be the source of an interrupt that wakes up the CPU. 1 SCI clocks freeze while CPU is in wait mode.
5 RSRC	**Receiver Source Select** — This bit has no meaning or effect unless the LOOPS bit is set to 1. When LOOPS = 1, the receiver input is internally connected to the TxD pin and RSRC determines whether this connection is also connected to the transmitter output. 0 Provided LOOPS = 1, RSRC = 0 selects internal loop back mode and the SCI does not use the RxD pins. 1 Single-wire SCI mode where the TxD pin is connected to the transmitter output and receiver input.
4 M	**9-Bit or 8-Bit Mode Select** 0 Normal — start + 8 data bits (LSB first) + stop. 1 Receiver and transmitter use 9-bit data characters start + 8 data bits (LSB first) + 9th data bit + stop.
3 WAKE	**Receiver Wakeup Method Select** — Refer to Section 11.3.3.2, “Receiver Wakeup Operation” for more information. 0 Idle-line wakeup. 1 Address-mark wakeup.
2 ILT	**Idle Line Type Select** — Setting this bit to 1 ensures that the stop bit and logic 1 bits at the end of a character do not count toward the 10 or 11 bit times of the logic high level by the idle line detection logic. Refer to Section 11.3.3.2.1, “Idle-Line Wakeup” for more information. 0 Idle character bit count starts after start bit. 1 Idle character bit count starts after stop bit.
1 PE	**Parity Enable** — Enables hardware parity generation and checking. When parity is enabled, the most significant bit (MSB) of the data character (eighth or ninth data bit) is treated as the parity bit. 0 No hardware parity generation or checking. 1 Parity enabled.
0 PT	**Parity Type** — Provided parity is enabled (PE = 1), this bit selects even or odd parity. Odd parity means the total number of 1s in the data character, including the parity bit, is odd. Even parity means the total number of 1s in the data character, including the parity bit, is even. 0 Even parity. 1 Odd parity.

11.2.3 SCI Control Register 2 (SCIxC2)

This register can be read or written at any time.

	7	6	5	4	3	2	1	0
R W	TIE	TCIE	RIE	ILIE	TE	RE	RWU	SBK
Reset	0	0	0	0	0	0	0	0

Figure 11-7. SCI Control Register 2 (SCIxC2)

Table 11-4. SCIxC2 Register Field Descriptions

Field	Description
7 TIE	**Transmit Interrupt Enable (for TDRE)** 0 Hardware interrupts from TDRE disabled (use polling). 1 Hardware interrupt requested when TDRE flag is 1.
6 TCIE	**Transmission Complete Interrupt Enable (for TC)** 0 Hardware interrupts from TC disabled (use polling). 1 Hardware interrupt requested when TC flag is 1.
5 RIE	**Receiver Interrupt Enable (for RDRF)** 0 Hardware interrupts from RDRF disabled (use polling). 1 Hardware interrupt requested when RDRF flag is 1.
4 ILIE	**Idle Line Interrupt Enable (for IDLE)** 0 Hardware interrupts from IDLE disabled (use polling). 1 Hardware interrupt requested when IDLE flag is 1.
3 TE	**Transmitter Enable** 0 Transmitter off. 1 Transmitter on. TE must be 1 in order to use the SCI transmitter. When TE = 1, the SCI forces the TxD pin to act as an output for the SCI system. When the SCI is configured for single-wire operation (LOOPS = RSRC = 1), TXDIR controls the direction of traffic on the single SCI communication line (TxD pin). TE also can be used to queue an idle character by writing TE = 0 then TE = 1 while a transmission is in progress. Refer to Section 11.3.2.1, “Send Break and Queued Idle,” for more details. When TE is written to 0, the transmitter keeps control of the port TxD pin until any data, queued idle, or queued break character finishes transmitting before allowing the pin to revert to a general-purpose I/O pin.
2 RE	**Receiver Enable** — When the SCI receiver is off, the RxD pin reverts to being a general-purpose port I/O pin. If LOOPS = 1 , the RxD pin reverts to being a general-purpose I/O pin even if RE = 1. 0 Receiver off. 1 Receiver on.

Table 11-4. SCIxC2 Register Field Descriptions (continued)

Field	Description
1 RWU	**Receiver Wakeup Control** — This bit can be written to 1 to place the SCI receiver in a standby state where it waits for automatic hardware detection of a selected wakeup condition. The wakeup condition is either an idle line between messages (WAKE = 0, idle-line wakeup), or a logic 1 in the most significant data bit in a character (WAKE = 1, address-mark wakeup). Application software sets RWU and (normally) a selected hardware condition automatically clears RWU. Refer to Section 11.3.3.2, "Receiver Wakeup Operation," for more details. 0 Normal SCI receiver operation. 1 SCI receiver in standby waiting for wakeup condition.
0 SBK	**Send Break** — Writing a 1 and then a 0 to SBK queues a break character in the transmit data stream. Additional break characters of 10 or 11 bit times of logic 0 are queued as long as SBK = 1. Depending on the timing of the set and clear of SBK relative to the information currently being transmitted, a second break character may be queued before software clears SBK. Refer to Section 11.3.2.1, "Send Break and Queued Idle," for more details. 0 Normal transmitter operation. 1 Queue break character(s) to be sent.

11.2.4 SCI Status Register 1 (SCIxS1)

This register has eight read-only status flags. Writes have no effect. Special software sequences (which do not involve writing to this register) are used to clear these status flags.

	7	6	5	4	3	2	1	0
R	TDRE	TC	RDRF	IDLE	OR	NF	FE	PF
W								
Reset	1	1	0	0	0	0	0	0

= Unimplemented or Reserved

Figure 11-8. SCI Status Register 1 (SCIxS1)

Table 11-5. SCIxS1 Register Field Descriptions

Field	Description
7 TDRE	**Transmit Data Register Empty Flag** — TDRE is set immediately after reset and when a transmit data value transfers from the transmit data buffer to the transmit shifter, leaving room for a new character in the buffer. To clear TDRE, read SCIxS1 with TDRE = 1 and then write to the SCI data register (SCIxD). 0 Transmit data register (buffer) full. 1 Transmit data register (buffer) empty.
6 TC	**Transmission Complete Flag** — TC is set immediately after reset and when TDRE = 1 and no data, preamble, or break character is being transmitted. 0 Transmitter active (sending data, a preamble, or a break). 1 Transmitter idle (transmission activity complete). TC is cleared automatically by reading SCIxS1 with TC = 1 and then doing one of the following three things: • Write to the SCI data register (SCIxD) to transmit new data • Queue a preamble by changing TE from 0 to 1 • Queue a break character by writing 1 to SBK in SCIxC2

Table 11-5. SCIxS1 Register Field Descriptions (continued)

Field	Description
5 RDRF	**Receive Data Register Full Flag** — RDRF becomes set when a character transfers from the receive shifter into the receive data register (SCIxD). To clear RDRF, read SCIxS1 with RDRF = 1 and then read the SCI data register (SCIxD). 0 Receive data register empty. 1 Receive data register full.
4 IDLE	**Idle Line Flag** — IDLE is set when the SCI receive line becomes idle for a full character time after a period of activity. When ILT = 0, the receiver starts counting idle bit times after the start bit. So if the receive character is all 1s, these bit times and the stop bit time count toward the full character time of logic high (10 or 11 bit times depending on the M control bit) needed for the receiver to detect an idle line. When ILT = 1, the receiver doesn't start counting idle bit times until after the stop bit. So the stop bit and any logic high bit times at the end of the previous character do not count toward the full character time of logic high needed for the receiver to detect an idle line. To clear IDLE, read SCIxS1 with IDLE = 1 and then read the SCI data register (SCIxD). After IDLE has been cleared, it cannot become set again until after a new character has been received and RDRF has been set. IDLE will get set only once even if the receive line remains idle for an extended period. 0 No idle line detected. 1 Idle line was detected.
3 OR	**Receiver Overrun Flag** — OR is set when a new serial character is ready to be transferred to the receive data register (buffer), but the previously received character has not been read from SCIxD yet. In this case, the new character (and all associated error information) is lost because there is no room to move it into SCIxD. To clear OR, read SCIxS1 with OR = 1 and then read the SCI data register (SCIxD). 0 No overrun. 1 Receive overrun (new SCI data lost).
2 NF	**Noise Flag** — The advanced sampling technique used in the receiver takes seven samples during the start bit and three samples in each data bit and the stop bit. If any of these samples disagrees with the rest of the samples within any bit time in the frame, the flag NF will be set at the same time as the flag RDRF gets set for the character. To clear NF, read SCIxS1 and then read the SCI data register (SCIxD). 0 No noise detected. 1 Noise detected in the received character in SCIxD.
1 FE	**Framing Error Flag** — FE is set at the same time as RDRF when the receiver detects a logic 0 where the stop bit was expected. This suggests the receiver was not properly aligned to a character frame. To clear FE, read SCIxS1 with FE = 1 and then read the SCI data register (SCIxD). 0 No framing error detected. This does not guarantee the framing is correct. 1 Framing error.
0 PF	**Parity Error Flag** — PF is set at the same time as RDRF when parity is enabled (PE = 1) and the parity bit in the received character does not agree with the expected parity value. To clear PF, read SCIxS1 and then read the SCI data register (SCIxD). 0 No parity error. 1 Parity error.

11.2.5 SCI Status Register 2 (SCIxS2)

This register has one read-only status flag. Writes have no effect.

	7	6	5	4	3	2	1	0
R	0	0	0	0	0	0	0	RAF
W								
Reset	0	0	0	0	0	0	0	0

= Unimplemented or Reserved

Figure 11-9. SCI Status Register 2 (SCIxS2)

Table 11-6. SCIxS2 Register Field Descriptions

Field	Description
0 RAF	**Receiver Active Flag** — RAF is set when the SCI receiver detects the beginning of a valid start bit, and RAF is cleared automatically when the receiver detects an idle line. This status flag can be used to check whether an SCI character is being received before instructing the MCU to go to stop mode. 0 SCI receiver idle waiting for a start bit. 1 SCI receiver active (RxD input not idle).

11.2.6 SCI Control Register 3 (SCIxC3)

	7	6	5	4	3	2	1	0
R	R8	T8	TXDIR	0	ORIE	NEIE	FEIE	PEIE
W								
Reset	0	0	0	0	0	0	0	0

= Unimplemented or Reserved

Figure 11-10. SCI Control Register 3 (SCIxC3)

Table 11-7. SCIxC3 Register Field Descriptions

Field	Description
7 R8	**Ninth Data Bit for Receiver** — When the SCI is configured for 9-bit data (M = 1), R8 can be thought of as a ninth receive data bit to the left of the MSB of the buffered data in the SCIxD register. When reading 9-bit data, read R8 before reading SCIxD because reading SCIxD completes automatic flag clearing sequences which could allow R8 and SCIxD to be overwritten with new data.
6 T8	**Ninth Data Bit for Transmitter** — When the SCI is configured for 9-bit data (M = 1), T8 may be thought of as a ninth transmit data bit to the left of the MSB of the data in the SCIxD register. When writing 9-bit data, the entire 9-bit value is transferred to the SCI shift register after SCIxD is written so T8 should be written (if it needs to change from its previous value) before SCIxD is written. If T8 does not need to change in the new value (such as when it is used to generate mark or space parity), it need not be written each time SCIxD is written.
5 TXDIR	**TxD Pin Direction in Single-Wire Mode** — When the SCI is configured for single-wire half-duplex operation (LOOPS = RSRC = 1), this bit determines the direction of data at the TxD pin. 0 TxD pin is an input in single-wire mode. 1 TxD pin is an output in single-wire mode.

Table 11-7. SCIxC3 Register Field Descriptions (continued)

Field	Description
3 ORIE	**Overrun Interrupt Enable** — This bit enables the overrun flag (OR) to generate hardware interrupt requests. 0 OR interrupts disabled (use polling). 1 Hardware interrupt requested when OR = 1.
2 NEIE	**Noise Error Interrupt Enable** — This bit enables the noise flag (NF) to generate hardware interrupt requests. 0 NF interrupts disabled (use polling). 1 Hardware interrupt requested when NF = 1.
1 FEIE	**Framing Error Interrupt Enable** — This bit enables the framing error flag (FE) to generate hardware interrupt requests. 0 FE interrupts disabled (use polling). 1 Hardware interrupt requested when FE = 1.
0 PEIE	**Parity Error Interrupt Enable** — This bit enables the parity error flag (PF) to generate hardware interrupt requests. 0 PF interrupts disabled (use polling). 1 Hardware interrupt requested when PF = 1.

11.2.7 SCI Data Register (SCIxD)

This register is actually two separate registers. Reads return the contents of the read-only receive data buffer and writes go to the write-only transmit data buffer. Reads and writes of this register are also involved in the automatic flag clearing mechanisms for the SCI status flags.

	7	6	5	4	3	2	1	0
R	R7	R6	R5	R4	R3	R2	R1	R0
W	T7	T6	T5	T4	T3	T2	T1	T0
Reset	0	0	0	0	0	0	0	0

Figure 11-11. SCI Data Register (SCIxD)

11.3 Functional Description

The SCI allows full-duplex, asynchronous, NRZ serial communication among the MCU and remote devices, including other MCUs. The SCI comprises a baud rate generator, transmitter, and receiver block. The transmitter and receiver operate independently, although they use the same baud rate generator. During normal operation, the MCU monitors the status of the SCI, writes the data to be transmitted, and processes received data. The following describes each of the blocks of the SCI.

11.3.1 Baud Rate Generation

As shown in Figure 11-12, the clock source for the SCI baud rate generator is the bus-rate clock.

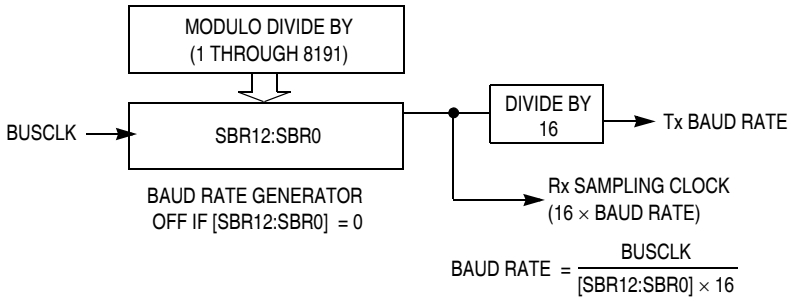

Figure 11-12. SCI Baud Rate Generation

SCI communications require the transmitter and receiver (which typically derive baud rates from independent clock sources) to use the same baud rate. Allowed tolerance on this baud frequency depends on the details of how the receiver synchronizes to the leading edge of the start bit and how bit sampling is performed.

The MCU resynchronizes to bit boundaries on every high-to-low transition, but in the worst case, there are no such transitions in the full 10- or 11-bit time character frame so any mismatch in baud rate is accumulated for the whole character time. For a Freescale Semiconductor SCI system whose bus frequency is driven by a crystal, the allowed baud rate mismatch is about ±4.5 percent for 8-bit data format and about ±4 percent for 9-bit data format. Although baud rate modulo divider settings do not always produce baud rates that exactly match standard rates, it is normally possible to get within a few percent, which is acceptable for reliable communications.

11.3.2 Transmitter Functional Description

This section describes the overall block diagram for the SCI transmitter (Figure 11-2), as well as specialized functions for sending break and idle characters.

The transmitter is enabled by setting the TE bit in SCIxC2. This queues a preamble character that is one full character frame of the idle state. The transmitter then remains idle until data is available in the transmit data buffer. Programs store data into the transmit data buffer by writing to the SCI data register (SCIxD).

The central element of the SCI transmitter is the transmit shift register that is either 10 or 11 bits long depending on the setting in the M control bit. For the remainder of this section, we will assume M = 0, selecting the normal 8-bit data mode. In 8-bit data mode, the shift register holds a start bit, eight data bits, and a stop bit. When the transmit shift register is available for a new SCI character, the value waiting in

the transmit data register is transferred to the shift register (synchronized with the baud rate clock) and the transmit data register empty (TDRE) status flag is set to indicate another character may be written to the transmit data buffer at SCIxD.

If no new character is waiting in the transmit data buffer after a stop bit is shifted out the TxD1 pin, the transmitter sets the transmit complete flag and enters an idle mode, with TxD1 high, waiting for more characters to transmit.

Writing 0 to TE does not immediately release the pin to be a general-purpose I/O pin. Any transmit activity that is in progress must first be completed. This includes data characters in progress, queued idle characters, and queued break characters.

11.3.2.1 Send Break and Queued Idle

The SBK control bit in SCIxC2 is used to send break characters which were originally used to gain the attention of old teletype receivers. Break characters are a full character time of logic 0 (10 bit times including the start and stop bits). Normally, a program would wait for TDRE to become set to indicate the last character of a message has moved to the transmit shifter, then write 1 and then write 0 to the SBK bit. This action queues a break character to be sent as soon as the shifter is available. If SBK is still 1 when the queued break moves into the shifter (synchronized to the baud rate clock), an additional break character is queued. If the receiving device is another Freescale Semiconductor SCI, the break characters will be received as 0s in all eight data bits and a framing error (FE = 1) occurs.

When idle-line wakeup is used, a full character time of idle (logic 1) is needed between messages to wake up any sleeping receivers. Normally, a program would wait for TDRE to become set to indicate the last character of a message has moved to the transmit shifter, then write 0 and then write 1 to the TE bit. This action queues an idle character to be sent as soon as the shifter is available. As long as the character in the shifter does not finish while TE = 0, the SCI transmitter never actually releases control of the TxD1 pin. If there is a possibility of the shifter finishing while TE = 0, set the general-purpose I/O controls so the pin that is shared with TxD1 is an output driving a logic 1. This ensures that the TxD1 line will look like a normal idle line even if the SCI loses control of the port pin between writing 0 and then 1 to TE.

11.3.3 Receiver Functional Description

In this section, the data sampling technique used to reconstruct receiver data is described in more detail; two variations of the receiver wakeup function are explained. (The receiver block diagram is shown in Figure 11-3.)

The receiver is enabled by setting the RE bit in SCIxC2. Character frames consist of a start bit of logic 0, eight (or nine) data bits (LSB first), and a stop bit of logic 1. For information about 9-bit data mode, refer to Section 11.3.5.1, “8- and 9-Bit Data Modes.” For the remainder of this discussion, we assume the SCI is configured for normal 8-bit data mode.

After receiving the stop bit into the receive shifter, and provided the receive data register is not already full, the data character is transferred to the receive data register and the receive data register full (RDRF) status flag is set. If RDRF was already set indicating the receive data register (buffer) was already full, the overrun (OR) status flag is set and the new data is lost. Because the SCI receiver is double-buffered, the

program has one full character time after RDRF is set before the data in the receive data buffer must be read to avoid a receiver overrun.

When a program detects that the receive data register is full (RDRF = 1), it gets the data from the receive data register by reading SCIxD. The RDRF flag is cleared automatically by a 2-step sequence which is normally satisfied in the course of the user's program that handles receive data. Refer to Section 11.3.4, "Interrupts and Status Flags," for more details about flag clearing.

11.3.3.1 Data Sampling Technique

The SCI receiver uses a 16× baud rate clock for sampling. The receiver starts by taking logic level samples at 16 times the baud rate to search for a falling edge on the RxD1 serial data input pin. A falling edge is defined as a logic 0 sample after three consecutive logic 1 samples. The 16× baud rate clock is used to divide the bit time into 16 segments labeled RT1 through RT16. When a falling edge is located, three more samples are taken at RT3, RT5, and RT7 to make sure this was a real start bit and not merely noise. If at least two of these three samples are 0, the receiver assumes it is synchronized to a receive character.

The receiver then samples each bit time, including the start and stop bits, at RT8, RT9, and RT10 to determine the logic level for that bit. The logic level is interpreted to be that of the majority of the samples taken during the bit time. In the case of the start bit, the bit is assumed to be 0 if at least two of the samples at RT3, RT5, and RT7 are 0 even if one or all of the samples taken at RT8, RT9, and RT10 are 1s. If any sample in any bit time (including the start and stop bits) in a character frame fails to agree with the logic level for that bit, the noise flag (NF) will be set when the received character is transferred to the receive data buffer.

The falling edge detection logic continuously looks for falling edges, and if an edge is detected, the sample clock is resynchronized to bit times. This improves the reliability of the receiver in the presence of noise or mismatched baud rates. It does not improve worst case analysis because some characters do not have any extra falling edges anywhere in the character frame.

In the case of a framing error, provided the received character was not a break character, the sampling logic that searches for a falling edge is filled with three logic 1 samples so that a new start bit can be detected almost immediately.

In the case of a framing error, the receiver is inhibited from receiving any new characters until the framing error flag is cleared. The receive shift register continues to function, but a complete character cannot transfer to the receive data buffer if FE is still set.

11.3.3.2 Receiver Wakeup Operation

Receiver wakeup is a hardware mechanism that allows an SCI receiver to ignore the characters in a message that is intended for a different SCI receiver. In such a system, all receivers evaluate the first character(s) of each message, and as soon as they determine the message is intended for a different receiver, they write logic 1 to the receiver wake up (RWU) control bit in SCIxC2. When RWU = 1, it inhibits setting of the status flags associated with the receiver, thus eliminating the software overhead for handling the unimportant message characters. At the end of a message, or at the beginning of the next message, all receivers automatically force RWU to 0 so all receivers wake up in time to look at the first character(s) of the next message.

11.3.3.2.1 Idle-Line Wakeup

When WAKE = 0, the receiver is configured for idle-line wakeup. In this mode, RWU is cleared automatically when the receiver detects a full character time of the idle-line level. The M control bit selects 8-bit or 9-bit data mode that determines how many bit times of idle are needed to constitute a full character time (10 or 11 bit times because of the start and stop bits).

When the RWU bit is set, the idle character that wakes a receiver does not set the receiver idle bit, IDLE, or the receive data register full flag, RDRF. It therefore will not generate an interrupt when this idle character occurs. The receiver will wake up and wait for the next data transmission which will set RDRF and generate an interrupt if enabled.

The idle-line type (ILT) control bit selects one of two ways to detect an idle line. When ILT = 0, the idle bit counter starts after the start bit so the stop bit and any logic 1s at the end of a character count toward the full character time of idle. When ILT = 1, the idle bit counter does not start until after a stop bit time, so the idle detection is not affected by the data in the last character of the previous message.

11.3.3.2.2 Address-Mark Wakeup

When WAKE = 1, the receiver is configured for address-mark wakeup. In this mode, RWU is cleared automatically when the receiver detects a logic 1 in the most significant bit of a received character (eighth bit in M = 0 mode and ninth bit in M = 1 mode).

Address-mark wakeup allows messages to contain idle characters but requires that the MSB be reserved for use in address frames. The logic 1 MSB of an address frame clears the receivers RWU bit before the stop bit is received and sets the RDRF flag.

11.3.4 Interrupts and Status Flags

The SCI system has three separate interrupt vectors to reduce the amount of software needed to isolate the cause of the interrupt. One interrupt vector is associated with the transmitter for TDRE and TC events. Another interrupt vector is associated with the receiver for RDRF and IDLE events, and a third vector is used for OR, NF, FE, and PF error conditions. Each of these eight interrupt sources can be separately masked by local interrupt enable masks. The flags can still be polled by software when the local masks are cleared to disable generation of hardware interrupt requests.

The SCI transmitter has two status flags that optionally can generate hardware interrupt requests. Transmit data register empty (TDRE) indicates when there is room in the transmit data buffer to write another transmit character to SCIxD. If the transmit interrupt enable (TIE) bit is set, a hardware interrupt will be requested whenever TDRE = 1. Transmit complete (TC) indicates that the transmitter is finished transmitting all data, preamble, and break characters and is idle with TxD1 high. This flag is often used in systems with modems to determine when it is safe to turn off the modem. If the transmit complete interrupt enable (TCIE) bit is set, a hardware interrupt will be requested whenever TC = 1. Instead of hardware interrupts, software polling may be used to monitor the TDRE and TC status flags if the corresponding TIE or TCIE local interrupt masks are 0s.

When a program detects that the receive data register is full (RDRF = 1), it gets the data from the receive data register by reading SCIxD. The RDRF flag is cleared by reading SCIxS1 while RDRF = 1 and then reading SCIxD.

When polling is used, this sequence is naturally satisfied in the normal course of the user program. If hardware interrupts are used, SCIxS1 must be read in the interrupt service routine (ISR). Normally, this is done in the ISR anyway to check for receive errors, so the sequence is automatically satisfied.

The IDLE status flag includes logic that prevents it from getting set repeatedly when the RxD1 line remains idle for an extended period of time. IDLE is cleared by reading SCIxS1 while IDLE = 1 and then reading SCIxD. After IDLE has been cleared, it cannot become set again until the receiver has received at least one new character and has set RDRF.

If the associated error was detected in the received character that caused RDRF to be set, the error flags — noise flag (NF), framing error (FE), and parity error flag (PF) — get set at the same time as RDRF. These flags are not set in overrun cases.

If RDRF was already set when a new character is ready to be transferred from the receive shifter to the receive data buffer, the overrun (OR) flag gets set instead and the data and any associated NF, FE, or PF condition is lost.

11.3.5 Additional SCI Functions

The following sections describe additional SCI functions.

11.3.5.1 8- and 9-Bit Data Modes

The SCI system (transmitter and receiver) can be configured to operate in 9-bit data mode by setting the M control bit in SCIxC1. In 9-bit mode, there is a ninth data bit to the left of the MSB of the SCI data register. For the transmit data buffer, this bit is stored in T8 in SCIxC3. For the receiver, the ninth bit is held in R8 in SCIxC3.

For coherent writes to the transmit data buffer, write to the T8 bit before writing to SCIxD.

If the bit value to be transmitted as the ninth bit of a new character is the same as for the previous character, it is not necessary to write to T8 again. When data is transferred from the transmit data buffer to the transmit shifter, the value in T8 is copied at the same time data is transferred from SCIxD to the shifter.

9-bit data mode typically is used in conjunction with parity to allow eight bits of data plus the parity in the ninth bit. Or it is used with address-mark wakeup so the ninth data bit can serve as the wakeup bit. In custom protocols, the ninth bit can also serve as a software-controlled marker.

11.3.5.2 Stop Mode Operation

During all stop modes, clocks to the SCI module are halted.

In stop1 and stop2 modes, all SCI register data is lost and must be re-initialized upon recovery from these two stop modes.

No SCI module registers are affected in stop3 mode.

Because the clocks are halted, the SCI module will resume operation upon exit from stop (only in stop3 mode). Software should ensure stop mode is not entered while there is a character being transmitted out of or received into the SCI module.

11.3.5.3 Loop Mode

When LOOPS = 1, the RSRC bit in the same register chooses between loop mode (RSRC = 0) or single-wire mode (RSRC = 1). Loop mode is sometimes used to check software, independent of connections in the external system, to help isolate system problems. In this mode, the transmitter output is internally connected to the receiver input and the RxD1 pin is not used by the SCI, so it reverts to a general-purpose port I/O pin.

11.3.5.4 Single-Wire Operation

When LOOPS = 1, the RSRC bit in the same register chooses between loop mode (RSRC = 0) or single-wire mode (RSRC = 1). Single-wire mode is used to implement a half-duplex serial connection. The receiver is internally connected to the transmitter output and to the TxD1 pin. The RxD1 pin is not used and reverts to a general-purpose port I/O pin.

In single-wire mode, the TXDIR bit in SCIxC3 controls the direction of serial data on the TxD1 pin. When TXDIR = 0, the TxD1 pin is an input to the SCI receiver and the transmitter is temporarily disconnected from the TxD1 pin so an external device can send serial data to the receiver. When TXDIR = 1, the TxD1 pin is an output driven by the transmitter. In single-wire mode, the internal loop back connection from the transmitter to the receiver causes the receiver to receive characters that are sent out by the transmitter.

Chapter 12
Serial Peripheral Interface (S08SPIV3)

12.1 Introduction

The MC9S08GBxxA/GTxxA provides one serial peripheral interface (SPI) module. The four pins associated with SPI functionality are shared with port E pins 2–5. See the Appendix A, "Electrical Characteristics," appendix for SPI electrical parametric information. When the SPI is enabled, the direction of pins is controlled by module configuration. If the SPI is disabled, all four pins can be used as general-purpose I/O.

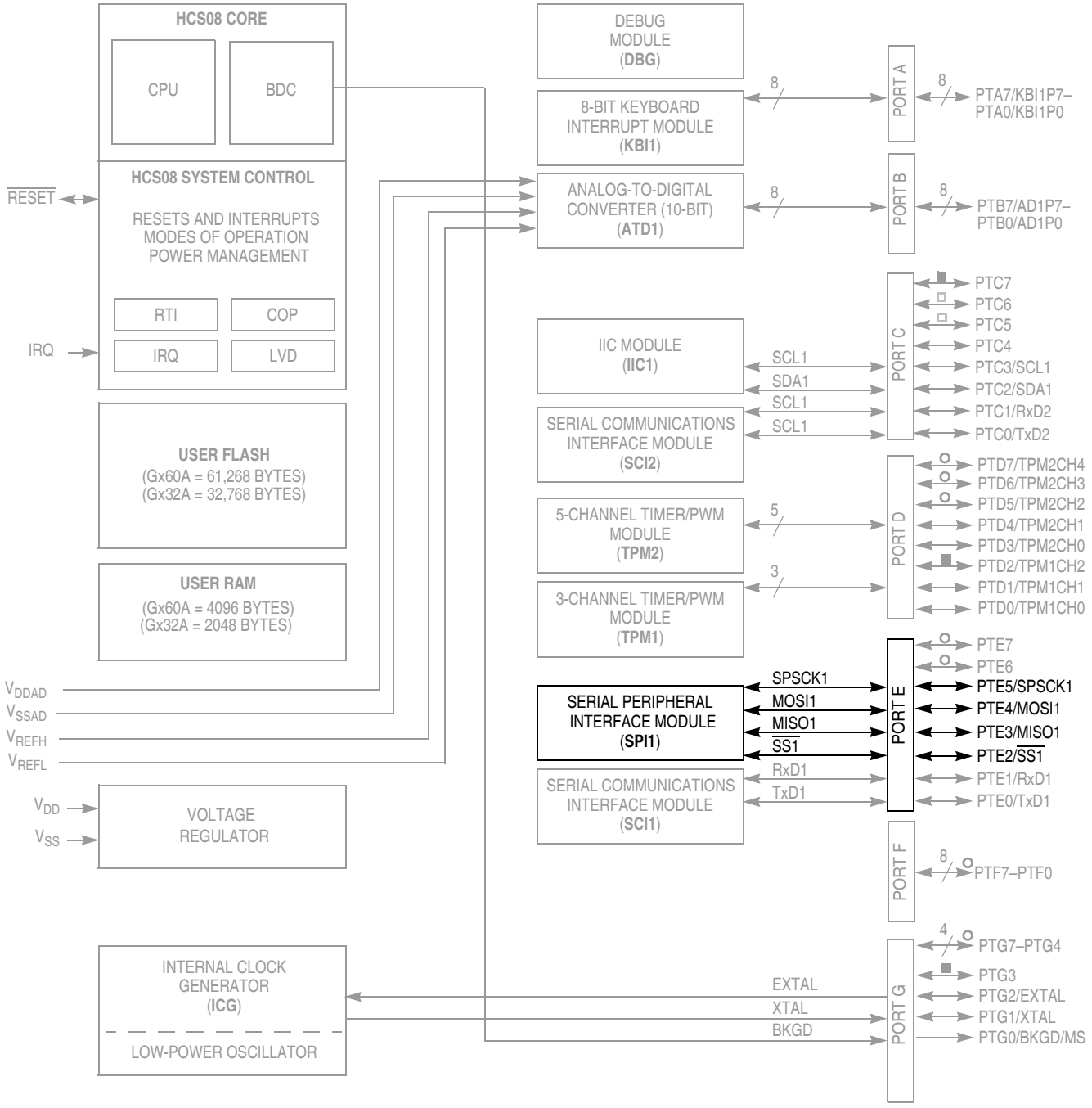

Note: Not all pins are bonded out in all packages. See Table 2-2 for complete details.

Block Diagram Symbol Key:
○ = Not connected in 48-, 44-, and 42-pin packages
■ = Not connected in 44- and 42-pin packages
□ = Not connected in 42-pin packages

Figure 12-1. Block Diagram Highlighting the SPI Module

12.1.1 Features

Features of the SPI module include:

- Master or slave mode operation
- Full-duplex or single-wire bidirectional option
- Programmable transmit bit rate
- Double-buffered transmit and receive
- Serial clock phase and polarity options
- Slave select output
- Selectable MSB-first or LSB-first shifting

12.1.2 Block Diagrams

This section includes block diagrams showing SPI system connections, the internal organization of the SPI module, and the SPI clock dividers that control the master mode bit rate.

12.1.2.1 SPI System Block Diagram

Figure 12-2 shows the SPI modules of two MCUs connected in a master-slave arrangement. The master device initiates all SPI data transfers. During a transfer, the master shifts data out (on the MOSI pin) to the slave while simultaneously shifting data in (on the MISO pin) from the slave. The transfer effectively exchanges the data that was in the SPI shift registers of the two SPI systems. The SPSCK signal is a clock output from the master and an input to the slave. The slave device must be selected by a low level on the slave select input ($\overline{SS}$ pin). In this system, the master device has configured its $\overline{SS}$ pin as an optional slave select output.

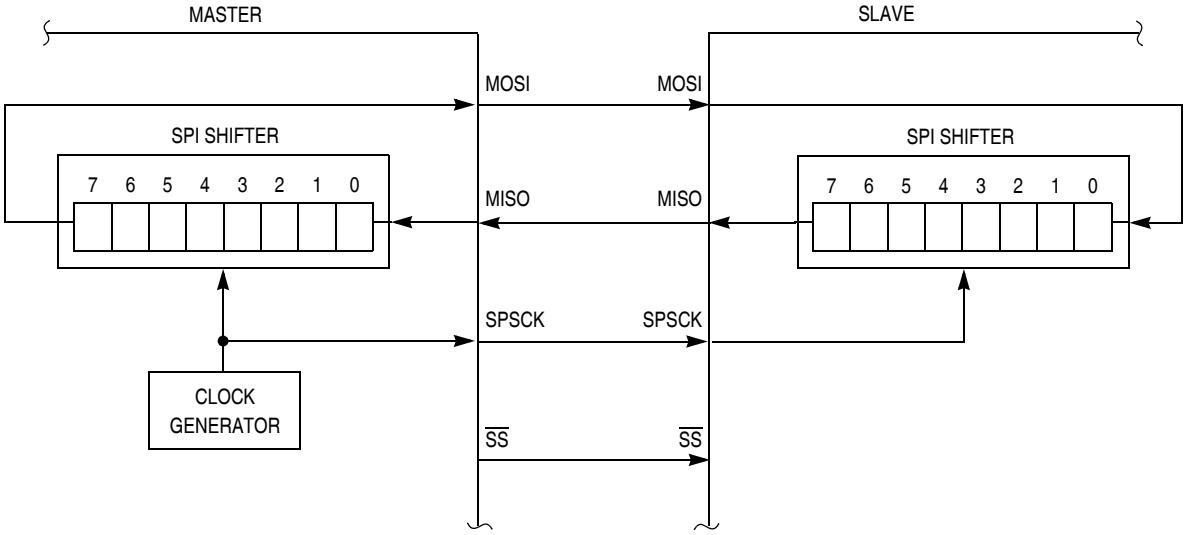

Figure 12-2. SPI System Connections

The most common uses of the SPI system include connecting simple shift registers for adding input or output ports or connecting small peripheral devices such as serial A/D or D/A converters. Although Figure 12-2 shows a system where data is exchanged between two MCUs, many practical systems involve simpler connections where data is unidirectionally transferred from the master MCU to a slave or from a slave to the master MCU.

12.1.2.2 SPI Module Block Diagram

Figure 12-3 is a block diagram of the SPI module. The central element of the SPI is the SPI shift register. Data is written to the double-buffered transmitter (write to SPI1D) and gets transferred to the SPI shift register at the start of a data transfer. After shifting in a byte of data, the data is transferred into the double-buffered receiver where it can be read (read from SPI1D). Pin multiplexing logic controls connections between MCU pins and the SPI module.

When the SPI is configured as a master, the clock output is routed to the SPSCK pin, the shifter output is routed to MOSI, and the shifter input is routed from the MISO pin.

When the SPI is configured as a slave, the SPSCK pin is routed to the clock input of the SPI, the shifter output is routed to MISO, and the shifter input is routed from the MOSI pin.

In the external SPI system, simply connect all SPSCK pins to each other, all MISO pins together, and all MOSI pins together. Peripheral devices often use slightly different names for these pins.

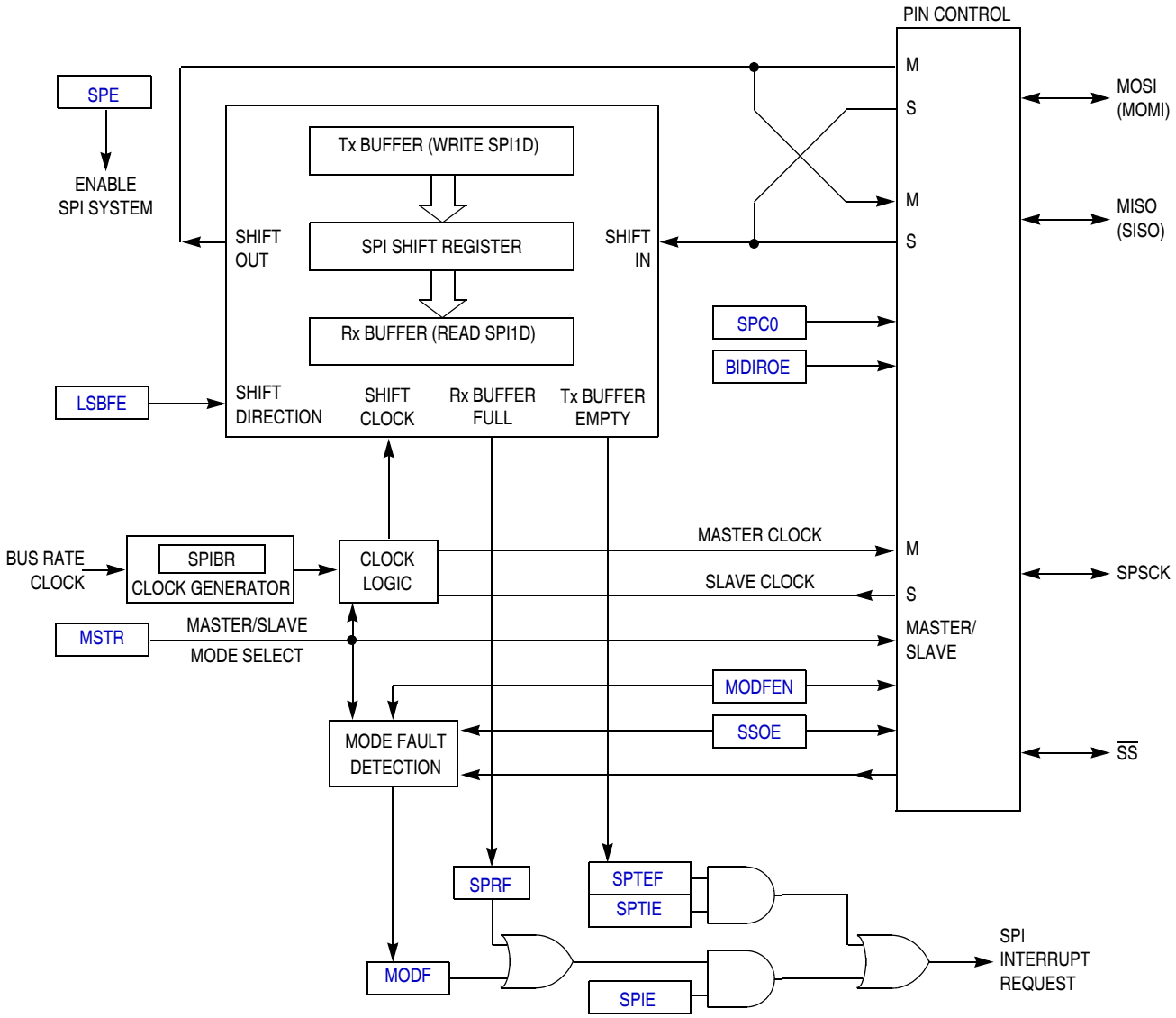

Figure 12-3. SPI Module Block Diagram

12.1.3 SPI Baud Rate Generation

As shown in Figure 12-4, the clock source for the SPI baud rate generator is the bus clock. The three prescale bits (SPPR2:SPPR1:SPPR0) choose a prescale divisor of 1, 2, 3, 4, 5, 6, 7, or 8. The three rate select bits (SPR2:SPR1:SPR0) divide the output of the prescaler stage by 2, 4, 8, 16, 32, 64, 128, or 256 to get the internal SPI master mode bit-rate clock.

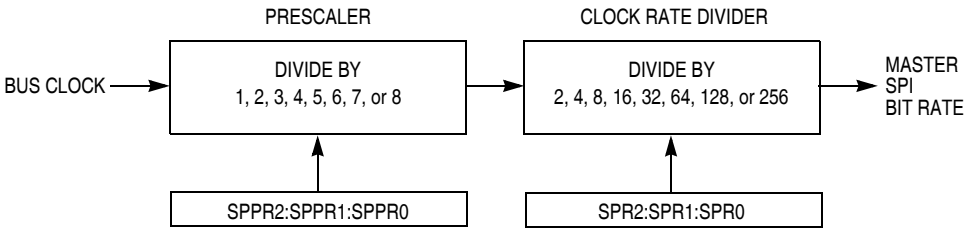

Figure 12-4. SPI Baud Rate Generation

12.2 External Signal Description

The SPI optionally shares four port pins. The function of these pins depends on the settings of SPI control bits. When the SPI is disabled (SPE = 0), these four pins revert to being general-purpose port I/O pins that are not controlled by the SPI.

12.2.1 SPSCK — SPI Serial Clock

When the SPI is enabled as a slave, this pin is the serial clock input. When the SPI is enabled as a master, this pin is the serial clock output.

12.2.2 MOSI — Master Data Out, Slave Data In

When the SPI is enabled as a master and SPI pin control zero (SPC0) is 0 (not bidirectional mode), this pin is the serial data output. When the SPI is enabled as a slave and SPC0 = 0, this pin is the serial data input. If SPC0 = 1 to select single-wire bidirectional mode, and master mode is selected, this pin becomes the bidirectional data I/O pin (MOMI). Also, the bidirectional mode output enable bit determines whether the pin acts as an input (BIDIROE = 0) or an output (BIDIROE = 1). If SPC0 = 1 and slave mode is selected, this pin is not used by the SPI and reverts to being a general-purpose port I/O pin.

12.2.3 MISO — Master Data In, Slave Data Out

When the SPI is enabled as a master and SPI pin control zero (SPC0) is 0 (not bidirectional mode), this pin is the serial data input. When the SPI is enabled as a slave and SPC0 = 0, this pin is the serial data output. If SPC0 = 1 to select single-wire bidirectional mode, and slave mode is selected, this pin becomes the bidirectional data I/O pin (SISO) and the bidirectional mode output enable bit determines whether the pin acts as an input (BIDIROE = 0) or an output (BIDIROE = 1). If SPC0 = 1 and master mode is selected, this pin is not used by the SPI and reverts to being a general-purpose port I/O pin.

12.2.4 $\overline{\text{SS}}$ — Slave Select

When the SPI is enabled as a slave, this pin is the low-true slave select input. When the SPI is enabled as a master and mode fault enable is off (MODFEN = 0), this pin is not used by the SPI and reverts to being a general-purpose port I/O pin. When the SPI is enabled as a master and MODFEN = 1, the slave select output enable bit determines whether this pin acts as the mode fault input (SSOE = 0) or as the slave select output (SSOE = 1).

12.3 Modes of Operation

12.3.1 SPI in Stop Modes

The SPI is disabled in all stop modes, regardless of the settings before executing the STOP instruction. During either stop1 or stop2 mode, the SPI module will be fully powered down. Upon wake-up from stop1 or stop2 mode, the SPI module will be in the reset state. During stop3 mode, clocks to the SPI module are halted. No registers are affected. If stop3 is exited with a reset, the SPI will be put into its reset state. If stop3 is exited with an interrupt, the SPI continues from the state it was in when stop3 was entered.

12.4 Register Definition

The SPI has five 8-bit registers to select SPI options, control baud rate, report SPI status, and for transmit/receive data.

Refer to the direct-page register summary in the Memory chapter of this data sheet for the absolute address assignments for all SPI registers. This section refers to registers and control bits only by their names, and a Freescale-provided equate or header file is used to translate these names into the appropriate absolute addresses.

12.4.1 SPI Control Register 1 (SPI1C1)

This read/write register includes the SPI enable control, interrupt enables, and configuration options.

	7	6	5	4	3	2	1	0
R W	SPIE	SPE	SPTIE	MSTR	CPOL	CPHA	SSOE	LSBFE
Reset	0	0	0	0	0	1	0	0

Figure 12-5. SPI Control Register 1 (SPI1C1)

Table 12-1. SPI1C1 Field Descriptions

Field	Description
7 SPIE	**SPI Interrupt Enable (for SPRF and MODF)** — This is the interrupt enable for SPI receive buffer full (SPRF) and mode fault (MODF) events. 0 Interrupts from SPRF and MODF inhibited (use polling) 1 When SPRF or MODF is 1, request a hardware interrupt
6 SPE	**SPI System Enable** — Disabling the SPI halts any transfer that is in progress, clears data buffers, and initializes internal state machines. SPRF is cleared and SPTEF is set to indicate the SPI transmit data buffer is empty. 0 SPI system inactive 1 SPI system enabled
5 SPTIE	**SPI Transmit Interrupt Enable** — This is the interrupt enable bit for SPI transmit buffer empty (SPTEF). 0 Interrupts from SPTEF inhibited (use polling) 1 When SPTEF is 1, hardware interrupt requested

Table 12-1. SPI1C1 Field Descriptions (continued)

Field	Description
4 MSTR	**Master/Slave Mode Select** 0 SPI module configured as a slave SPI device 1 SPI module configured as a master SPI device
3 CPOL	**Clock Polarity** — This bit effectively places an inverter in series with the clock signal from a master SPI or to a slave SPI device. Refer to Section 12.5.1, "SPI Clock Formats" for more details. 0 Active-high SPI clock (idles low) 1 Active-low SPI clock (idles high)
2 CPHA	**Clock Phase** — This bit selects one of two clock formats for different kinds of synchronous serial peripheral devices. Refer to Section 12.5.1, "SPI Clock Formats" for more details. 0 First edge on SPSCK occurs at the middle of the first cycle of an 8-cycle data transfer 1 First edge on SPSCK occurs at the start of the first cycle of an 8-cycle data transfer
1 SSOE	**Slave Select Output Enable** — This bit is used in combination with the mode fault enable (MODFEN) bit in SPCR2 and the master/slave (MSTR) control bit to determine the function of the $\overline{SS}$ pin as shown in Table 12-2.
0 LSBFE	**LSB First (Shifter Direction)** 0 SPI serial data transfers start with most significant bit 1 SPI serial data transfers start with least significant bit

Table 12-2. $\overline{SS}$ Pin Function

MODFEN	SSOE	Master Mode	Slave Mode
0	0	General-purpose I/O (not SPI)	Slave select input
0	1	General-purpose I/O (not SPI)	Slave select input
1	0	$\overline{SS}$ input for mode fault	Slave select input
1	1	Automatic $\overline{SS}$ output	Slave select input

NOTE

Ensure that the SPI should not be disabled (SPE=0) at the same time as a bit change to the CPHA bit. These changes should be performed as separate operations or unexpected behavior may occur.

12.4.2 SPI Control Register 2 (SPI1C2)

This read/write register is used to control optional features of the SPI system. Bits 7, 6, 5, and 2 are not implemented and always read 0.

	7	6	5	4	3	2	1	0
R	0	0	0	MODFEN	BIDIROE	0	SPISWAI	SPC0
W								
Reset	0	0	0	0	0	0	0	0

= Unimplemented or Reserved

Figure 12-6. SPI Control Register 2 (SPI1C2)

Table 12-3. SPI1C2 Register Field Descriptions

Field	Description
4 MODFEN	**Master Mode-Fault Function Enable** — When the SPI is configured for slave mode, this bit has no meaning or effect. (The $\overline{SS}$ pin is the slave select input.) In master mode, this bit determines how the $\overline{SS}$ pin is used (refer to Table 12-2 for more details). 0 Mode fault function disabled, master $\overline{SS}$ pin reverts to general-purpose I/O not controlled by SPI 1 Mode fault function enabled, master $\overline{SS}$ pin acts as the mode fault input or the slave select output
3 BIDIROE	**Bidirectional Mode Output Enable** — When bidirectional mode is enabled by SPI pin control 0 (SPC0) = 1, BIDIROE determines whether the SPI data output driver is enabled to the single bidirectional SPI I/O pin. Depending on whether the SPI is configured as a master or a slave, it uses either the MOSI (MOMI) or MISO (SISO) pin, respectively, as the single SPI data I/O pin. When SPC0 = 0, BIDIROE has no meaning or effect. 0 Output driver disabled so SPI data I/O pin acts as an input 1 SPI I/O pin enabled as an output
1 SPISWAI	**SPI Stop in Wait Mode** 0 SPI clocks continue to operate in wait mode 1 SPI clocks stop when the MCU enters wait mode
0 SPC0	**SPI Pin Control 0** — The SPC0 bit chooses single-wire bidirectional mode. If MSTR = 0 (slave mode), the SPI uses the MISO (SISO) pin for bidirectional SPI data transfers. If MSTR = 1 (master mode), the SPI uses the MOSI (MOMI) pin for bidirectional SPI data transfers. When SPC0 = 1, BIDIROE is used to enable or disable the output driver for the single bidirectional SPI I/O pin. 0 SPI uses separate pins for data input and data output 1 SPI configured for single-wire bidirectional operation

12.4.3 SPI Baud Rate Register (SPI1BR)

This register is used to set the prescaler and bit rate divisor for an SPI master. This register may be read or written at any time.

	7	6	5	4	3	2	1	0
R	0	SPPR2	SPPR1	SPPR0	0	SPR2	SPR1	SPR0
W								
Reset	0	0	0	0	0	0	0	0

= Unimplemented or Reserved

Figure 12-7. SPI Baud Rate Register (SPI1BR)

Table 12-4. SPI1BR Register Field Descriptions

Field	Description
6:4 SPPR[2:0]	**SPI Baud Rate Prescale Divisor** — This 3-bit field selects one of eight divisors for the SPI baud rate prescaler as shown in Table 12-5. The input to this prescaler is the bus rate clock (BUSCLK). The output of this prescaler drives the input of the SPI baud rate divider (see Figure 12-4).
2:0 SPR[2:0]	**SPI Baud Rate Divisor** — This 3-bit field selects one of eight divisors for the SPI baud rate divider as shown in Table 12-6. The input to this divider comes from the SPI baud rate prescaler (see Figure 12-4). The output of this divider is the SPI bit rate clock for master mode.

Table 12-5. SPI Baud Rate Prescaler Divisor

SPPR2:SPPR1:SPPR0	Prescaler Divisor
0:0:0	1
0:0:1	2
0:1:0	3
0:1:1	4
1:0:0	5
1:0:1	6
1:1:0	7
1:1:1	8

Table 12-6. SPI Baud Rate Divisor

SPR2:SPR1:SPR0	Rate Divisor
0:0:0	2
0:0:1	4
0:1:0	8
0:1:1	16
1:0:0	32
1:0:1	64
1:1:0	128
1:1:1	256

12.4.4 SPI Status Register (SPI1S)

This register has three read-only status bits. Bits 6, 3, 2, 1, and 0 are not implemented and always read 0. Writes have no meaning or effect.

	7	6	5	4	3	2	1	0
R	SPRF	0	SPTEF	MODF	0	0	0	0
W								
Reset	0	0	1	0	0	0	0	0

= Unimplemented or Reserved

Figure 12-8. SPI Status Register (SPI1S)

Table 12-7. SPI1S Register Field Descriptions

Field	Description
7 SPRF	**SPI Read Buffer Full Flag** — SPRF is set at the completion of an SPI transfer to indicate that received data may be read from the SPI data register (SPI1D). SPRF is cleared by reading SPRF while it is set, then reading the SPI data register. 0 No data available in the receive data buffer 1 Data available in the receive data buffer
5 SPTEF	**SPI Transmit Buffer Empty Flag** — This bit is set when there is room in the transmit data buffer. It is cleared by reading SPI1S with SPTEF set, followed by writing a data value to the transmit buffer at SPI1D. SPI1S must be read with SPTEF = 1 before writing data to SPI1D or the SPI1D write will be ignored. SPTEF generates an SPTEF CPU interrupt request if the SPTIE bit in the SPI1C1 is also set. SPTEF is automatically set when a data byte transfers from the transmit buffer into the transmit shift register. For an idle SPI (no data in the transmit buffer or the shift register and no transfer in progress), data written to SPI1D is transferred to the shifter almost immediately so SPTEF is set within two bus cycles allowing a second 8-bit data value to be queued into the transmit buffer. After completion of the transfer of the value in the shift register, the queued value from the transmit buffer will automatically move to the shifter and SPTEF will be set to indicate there is room for new data in the transmit buffer. If no new data is waiting in the transmit buffer, SPTEF simply remains set and no data moves from the buffer to the shifter. 0 SPI transmit buffer not empty 1 SPI transmit buffer empty
4 MODF	**Master Mode Fault Flag** — MODF is set if the SPI is configured as a master and the slave select input goes low, indicating some other SPI device is also configured as a master. The $\overline{SS}$ pin acts as a mode fault error input only when MSTR = 1, MODFEN = 1, and SSOE = 0; otherwise, MODF will never be set. MODF is cleared by reading MODF while it is 1, then writing to SPI control register 1 (SPI1C1). 0 No mode fault error 1 Mode fault error detected

12.4.5 SPI Data Register (SPI1D)

	7	6	5	4	3	2	1	0
R W	Bit 7	6	5	4	3	2	1	Bit 0
Reset	0	0	0	0	0	0	0	0

Figure 12-9. SPI Data Register (SPI1D)

Reads of this register return the data read from the receive data buffer. Writes to this register write data to the transmit data buffer. When the SPI is configured as a master, writing data to the transmit data buffer initiates an SPI transfer.

Data should not be written to the transmit data buffer unless the SPI transmit buffer empty flag (SPTEF) is set, indicating there is room in the transmit buffer to queue a new transmit byte.

Data may be read from SPI1D any time after SPRF is set and before another transfer is finished. Failure to read the data out of the receive data buffer before a new transfer ends causes a receive overrun condition and the data from the new transfer is lost.

12.5 Functional Description

An SPI transfer is initiated by checking for the SPI transmit buffer empty flag (SPTEF = 1) and then writing a byte of data to the SPI data register (SPI1D) in the master SPI device. When the SPI shift register is available, this byte of data is moved from the transmit data buffer to the shifter, SPTEF is set to indicate there is room in the buffer to queue another transmit character if desired, and the SPI serial transfer starts.

During the SPI transfer, data is sampled (read) on the MISO pin at one SPSCK edge and shifted, changing the bit value on the MOSI pin, one-half SPSCK cycle later. After eight SPSCK cycles, the data that was in the shift register of the master has been shifted out the MOSI pin to the slave while eight bits of data were shifted in the MISO pin into the master's shift register. At the end of this transfer, the received data byte is moved from the shifter into the receive data buffer and SPRF is set to indicate the data can be read by reading SPI1D. If another byte of data is waiting in the transmit buffer at the end of a transfer, it is moved into the shifter, SPTEF is set, and a new transfer is started.

Normally, SPI data is transferred most significant bit (MSB) first. If the least significant bit first enable (LSBFE) bit is set, SPI data is shifted LSB first.

When the SPI is configured as a slave, its $\overline{SS}$ pin must be driven low before a transfer starts and $\overline{SS}$ must stay low throughout the transfer. If a clock format where CPHA = 0 is selected, $\overline{SS}$ must be driven to a logic 1 between successive transfers. If CPHA = 1, $\overline{SS}$ may remain low between successive transfers. See Section 12.5.1, "SPI Clock Formats" for more details.

Because the transmitter and receiver are double buffered, a second byte, in addition to the byte currently being shifted out, can be queued into the transmit data buffer, and a previously received character can be in the receive data buffer while a new character is being shifted in. The SPTEF flag indicates when the transmit buffer has room for a new character. The SPRF flag indicates when a received character is available in the receive data buffer. The received character must be read out of the receive buffer (read SPI1D) before the next transfer is finished or a receive overrun error results.

In the case of a receive overrun, the new data is lost because the receive buffer still held the previous character and was not ready to accept the new data. There is no indication for such an overrun condition so the application system designer must ensure that previous data has been read from the receive buffer before a new transfer is initiated.

12.5.1 SPI Clock Formats

To accommodate a wide variety of synchronous serial peripherals from different manufacturers, the SPI system has a clock polarity (CPOL) bit and a clock phase (CPHA) control bit to select one of four clock formats for data transfers. CPOL selectively inserts an inverter in series with the clock. CPHA chooses between two different clock phase relationships between the clock and data.

Figure 12-10 shows the clock formats when CPHA = 1. At the top of the figure, the eight bit times are shown for reference with bit 1 starting at the first SPSCK edge and bit 8 ending one-half SPSCK cycle after the sixteenth SPSCK edge. The MSB first and LSB first lines show the order of SPI data bits depending on the setting in LSBFE. Both variations of SPSCK polarity are shown, but only one of these waveforms applies for a specific transfer, depending on the value in CPOL. The SAMPLE IN waveform applies to the MOSI input of a slave or the MISO input of a master. The MOSI waveform applies to the

MOSI output pin from a master and the MISO waveform applies to the MISO output from a slave. The $\overline{SS}$ OUT waveform applies to the slave select output from a master (provided MODFEN and SSOE = 1). The master $\overline{SS}$ output goes to active low one-half SPSCK cycle before the start of the transfer and goes back high at the end of the eighth bit time of the transfer. The $\overline{SS}$ IN waveform applies to the slave select input of a slave.

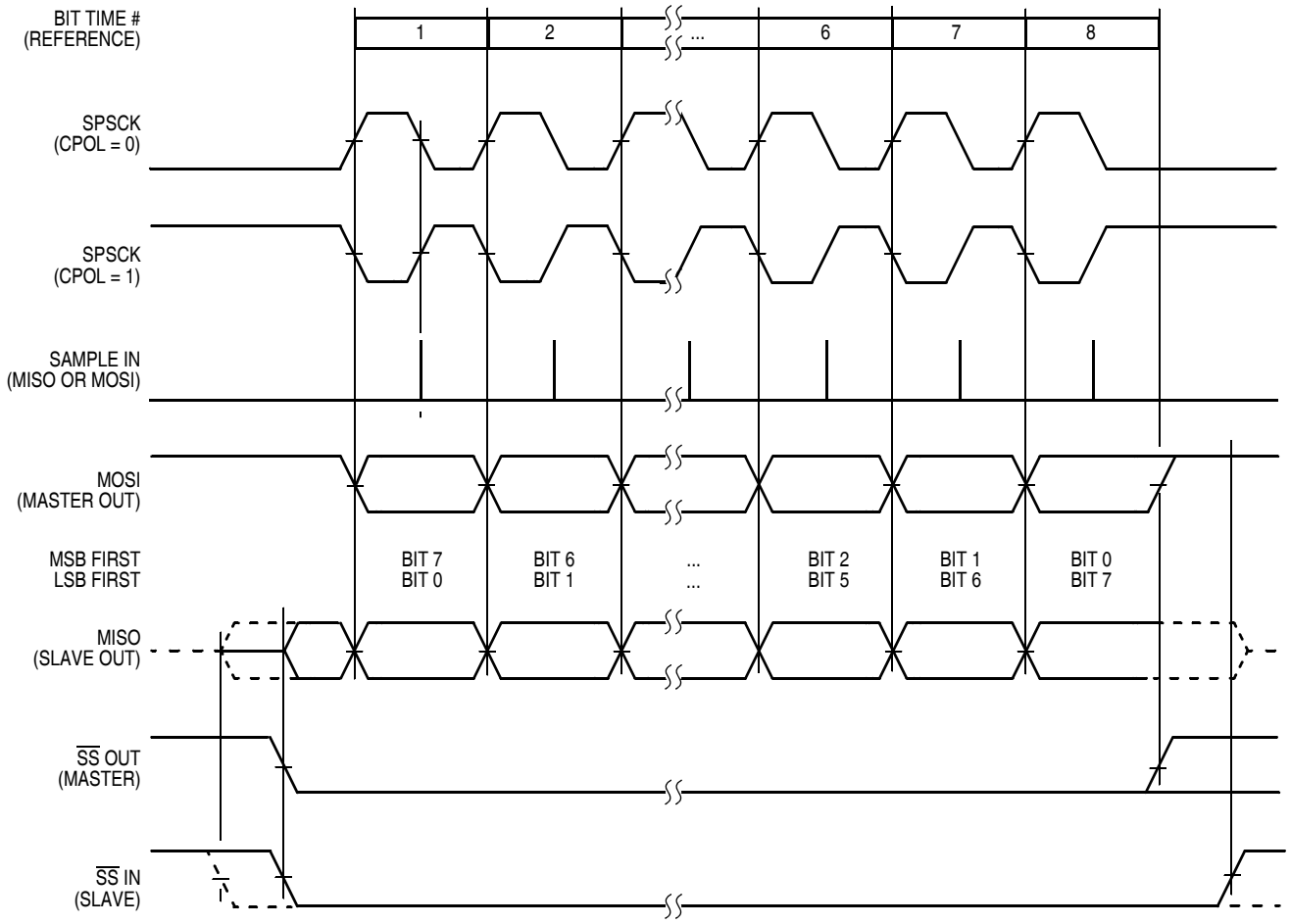

Figure 12-10. SPI Clock Formats (CPHA = 1)

When CPHA = 1, the slave begins to drive its MISO output when $\overline{SS}$ goes to active low, but the data is not defined until the first SPSCK edge. The first SPSCK edge shifts the first bit of data from the shifter onto the MOSI output of the master and the MISO output of the slave. The next SPSCK edge causes both the master and the slave to sample the data bit values on their MISO and MOSI inputs, respectively. At the third SPSCK edge, the SPI shifter shifts one bit position which shifts in the bit value that was just sampled, and shifts the second data bit value out the other end of the shifter to the MOSI and MISO outputs of the master and slave, respectively. When CHPA = 1, the slave's $\overline{SS}$ input is not required to go to its inactive high level between transfers.

Figure 12-11 shows the clock formats when CPHA = 0. At the top of the figure, the eight bit times are shown for reference with bit 1 starting as the slave is selected ($\overline{SS}$ IN goes low), and bit 8 ends at the last SPSCK edge. The MSB first and LSB first lines show the order of SPI data bits depending on the setting

in LSBFE. Both variations of SPSCK polarity are shown, but only one of these waveforms applies for a specific transfer, depending on the value in CPOL. The SAMPLE IN waveform applies to the MOSI input of a slave or the MISO input of a master. The MOSI waveform applies to the MOSI output pin from a master and the MISO waveform applies to the MISO output from a slave. The $\overline{SS}$ OUT waveform applies to the slave select output from a master (provided MODFEN and SSOE = 1). The master $\overline{SS}$ output goes to active low at the start of the first bit time of the transfer and goes back high one-half SPSCK cycle after the end of the eighth bit time of the transfer. The $\overline{SS}$ IN waveform applies to the slave select input of a slave.

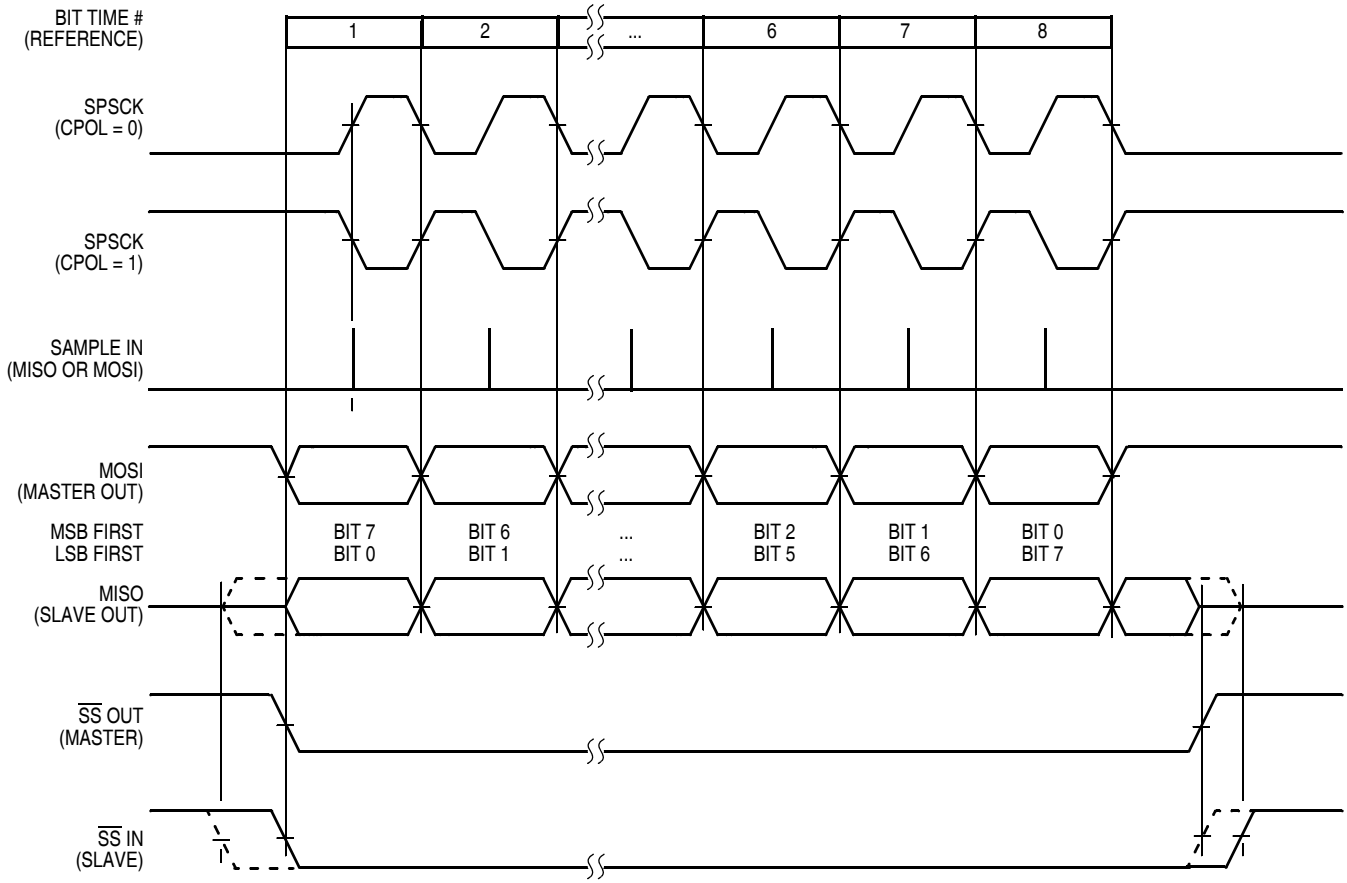

Figure 12-11. SPI Clock Formats (CPHA = 0)

When CPHA = 0, the slave begins to drive its MISO output with the first data bit value (MSB or LSB depending on LSBFE) when $\overline{SS}$ goes to active low. The first SPSCK edge causes both the master and the slave to sample the data bit values on their MISO and MOSI inputs, respectively. At the second SPSCK edge, the SPI shifter shifts one bit position which shifts in the bit value that was just sampled and shifts the second data bit value out the other end of the shifter to the MOSI and MISO outputs of the master and slave, respectively. When CPHA = 0, the slave's $\overline{SS}$ input must go to its inactive high level between transfers.

12.5.2 SPI Interrupts

There are three flag bits, two interrupt mask bits, and one interrupt vector associated with the SPI system. The SPI interrupt enable mask (SPIE) enables interrupts from the SPI receiver full flag (SPRF) and mode fault flag (MODF). The SPI transmit interrupt enable mask (SPTIE) enables interrupts from the SPI transmit buffer empty flag (SPTEF). When one of the flag bits is set, and the associated interrupt mask bit is set, a hardware interrupt request is sent to the CPU. If the interrupt mask bits are cleared, software can poll the associated flag bits instead of using interrupts. The SPI interrupt service routine (ISR) should check the flag bits to determine what event caused the interrupt. The service routine should also clear the flag bit(s) before returning from the ISR (usually near the beginning of the ISR).

12.5.3 Mode Fault Detection

A mode fault occurs and the mode fault flag (MODF) becomes set when a master SPI device detects an error on the $\overline{SS}$ pin (provided the $\overline{SS}$ pin is configured as the mode fault input signal). The $\overline{SS}$ pin is configured to be the mode fault input signal when MSTR = 1, mode fault enable is set (MODFEN = 1), and slave select output enable is clear (SSOE = 0).

The mode fault detection feature can be used in a system where more than one SPI device might become a master at the same time. The error is detected when a master's $\overline{SS}$ pin is low, indicating that some other SPI device is trying to address this master as if it were a slave. This could indicate a harmful output driver conflict, so the mode fault logic is designed to disable all SPI output drivers when such an error is detected.

When a mode fault is detected, MODF is set and MSTR is cleared to change the SPI configuration back to slave mode. The output drivers on the SPSCK, MOSI, and MISO (if not bidirectional mode) are disabled.

MODF is cleared by reading it while it is set, then writing to the SPI control register 1 (SPI1C1). User software should verify the error condition has been corrected before changing the SPI back to master mode.

Chapter 13
Inter-Integrated Circuit (S08IICV1)

13.1 Introduction

The MC9S08GBxxA/GTxxA series of microcontrollers provides one inter-integrated circuit (IIC) module for communication with other integrated circuits. The two pins associated with this module, SDA1 and SCL1 share port C pins 2 and 3, respectively. All functionality as described in this section is available on MC9S08GBxxA/GTxxA. When the IIC is enabled, the direction of pins is controlled by module configuration. If the IIC is disabled, both pins can be used as general-purpose I/O.

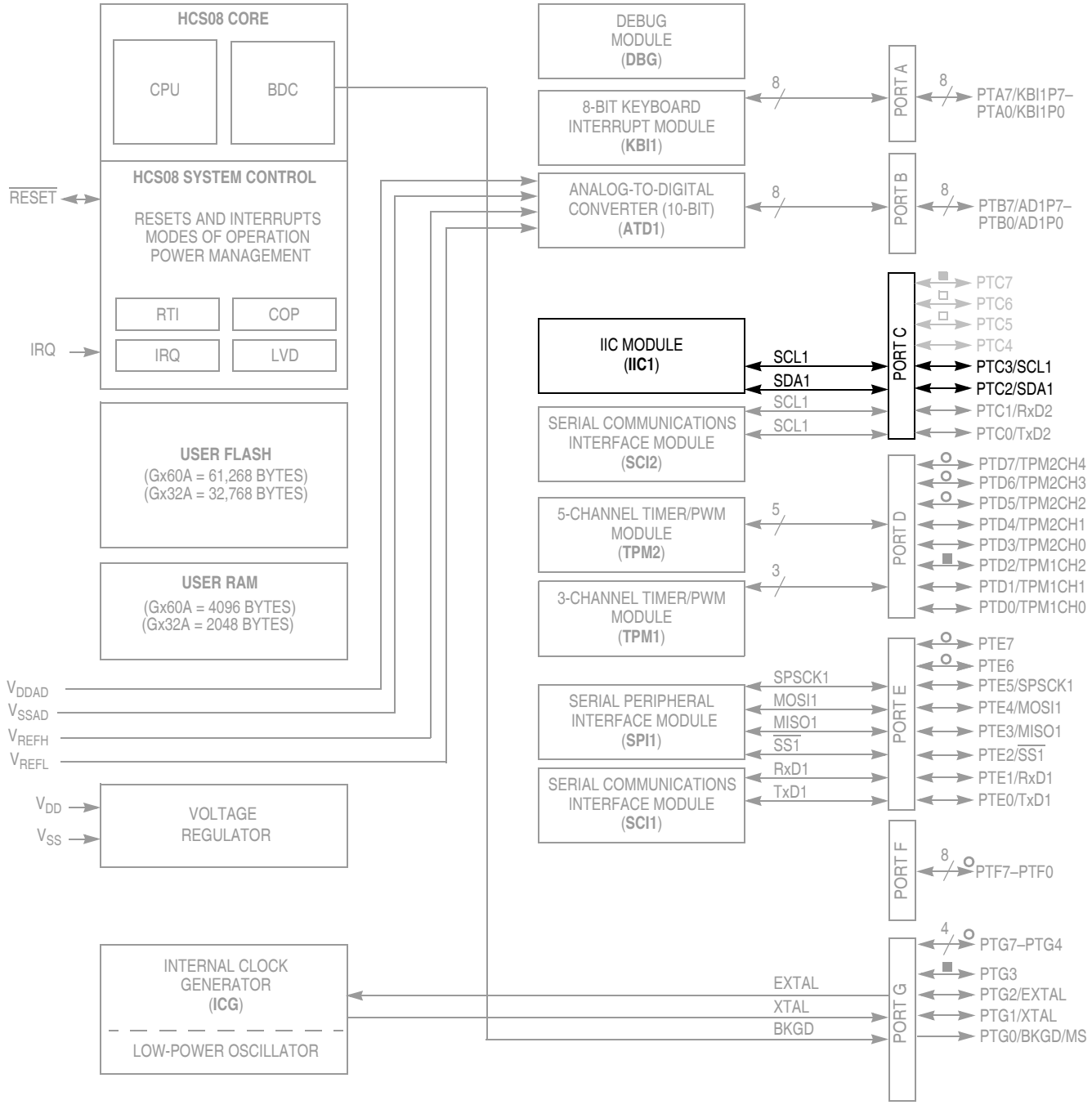

Note: Not all pins are bonded out in all packages. See Table 2-2 for complete details.

Block Diagram Symbol Key:
○ = Not connected in 48-, 44-, and 42-pin packages
■ = Not connected in 44- and 42-pin packages
□ = Not connected in 42-pin packages

Figure 13-1. Block Diagram Highlighting the IIC Module

13.1.1 Features

The IIC includes these distinctive features:

- Compatible with IIC bus standard
- Multi-master operation
- Software programmable for one of 64 different serial clock frequencies
- Software selectable acknowledge bit
- Interrupt driven byte-by-byte data transfer
- Arbitration lost interrupt with automatic mode switching from master to slave
- Calling address identification interrupt
- START and STOP signal generation/detection
- Repeated START signal generation
- Acknowledge bit generation/detection
- Bus busy detection

13.1.2 Modes of Operation

The IIC functions the same in normal and monitor modes. A brief description of the IIC in the various MCU modes is given here.

- Run mode — This is the basic mode of operation. To conserve power in this mode, disable the module.
- Wait mode — The module will continue to operate while the MCU is in wait mode and can provide a wake-up interrupt.
- Stop mode — The IIC is inactive in stop3 mode for reduced power consumption. The STOP instruction does not affect IIC register states. Stop2 and stop1 will reset the register contents.

13.1.3 Block Diagram

Figure 13-2 is a block diagram of the IIC.

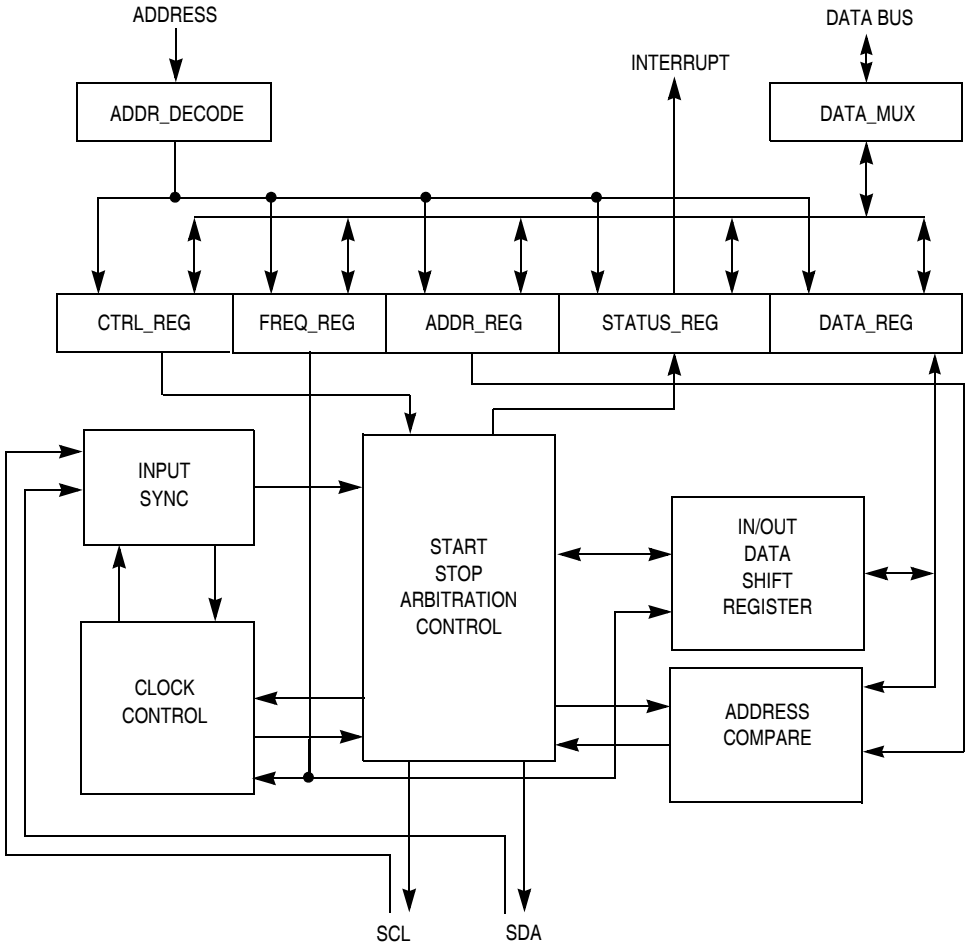

Figure 13-2. IIC Functional Block Diagram

13.2 External Signal Description

This section describes each user-accessible pin signal.

13.2.1 SCL — Serial Clock Line

The bidirectional SCL is the serial clock line of the IIC system.

13.2.2 SDA — Serial Data Line

The bidirectional SDA is the serial data line of the IIC system.

13.3 Register Definition

This section consists of the IIC register descriptions in address order.

Refer to the direct-page register summary in the Memory chapter of this data sheet for the absolute address assignments for all IIC registers. This section refers to registers and control bits only by their names. A Freescale-provided equate or header file is used to translate these names into the appropriate absolute addresses.

13.3.1 IIC Address Register (IIC1A)

	7	6	5	4	3	2	1	0
R	ADDR							0
W								
Reset	0	0	0	0	0	0	0	0

= Unimplemented or Reserved

Figure 13-3. IIC Address Register (IIC1A)

Table 13-1. IIC1A Register Field Descriptions

Field	Description
7:1 ADDR[7:1]	**IIC Address Register** — The ADDR contains the specific slave address to be used by the IIC module. This is the address the module will respond to when addressed as a slave.

13.3.2 IIC Frequency Divider Register (IIC1F)

	7	6	5	4	3	2	1	0
R	MULT		ICR					
W								
Reset	0	0	0	0	0	0	0	0

Figure 13-4. IIC Frequency Divider Register (IIC1F)

Table 13-2. IIC1F Register Field Descriptions

Field	Description
7:6 MULT	**IIC Multiplier Factor** — The MULT bits define the multiplier factor mul. This factor is used along with the SCL divider to generate the IIC baud rate. The multiplier factor mul as defined by the MULT bits is provided below. 00 mul = 01 01 mul = 02 10 mul = 04 11 Reserved
5:0 ICR	**IIC Clock Rate** — The ICR bits are used to prescale the bus clock for bit rate selection. These bits are used to define the SCL divider and the SDA hold value. The SCL divider multiplied by the value provided by the MULT register (multiplier factor mul) is used to generate IIC baud rate. IIC baud rate = bus speed (Hz)/(mul * SCL divider) SDA hold time is the delay from the falling edge of the SCL (IIC clock) to the changing of SDA (IIC data). The ICR is used to determine the SDA hold value. SDA hold time = bus period (s) * SDA hold value Table 13-3 provides the SCL divider and SDA hold values for corresponding values of the ICR. These values can be used to set IIC baud rate and SDA hold time. For example: Bus speed = 8 MHz MULT is set to 01 (mul = 2) Desired IIC baud rate = 100 kbps IIC baud rate = bus speed (Hz)/(mul * SCL divider) 100000 = 8000000/(2*SCL divider) SCL divider = 40 Table 13-3 shows that ICR must be set to 0B to provide an SCL divider of 40 and that this will result in an SDA hold value of 9. SDA hold time = bus period (s) * SDA hold value SDA hold time = 1/8000000 * 9 = 1.125 μs If the generated SDA hold value is not acceptable, the MULT bits can be used to change the ICR. This will result in a different SDA hold value.

Table 13-3. IIC Divider and Hold Values

ICR (hex)	SCL Divider	SDA Hold Value	ICR (hex)	SCL Divider	SDA Hold Value
00	20	7	20	160	17
01	22	7	21	192	17
02	24	8	22	224	33
03	26	8	23	256	33
04	28	9	24	288	49
05	30	9	25	320	49
06	34	10	26	384	65
07	40	10	27	480	65
08	28	7	28	320	33
09	32	7	29	384	33
0A	36	9	2A	448	65
0B	40	9	2B	512	65
0C	44	11	2C	576	97
0D	48	11	2D	640	97
0E	56	13	2E	768	129
0F	68	13	2F	960	129
10	48	9	30	640	65
11	56	9	31	768	65
12	64	13	32	896	129
13	72	13	33	1024	129
14	80	17	34	1152	193
15	88	17	35	1280	193
16	104	21	36	1536	257
17	128	21	37	1920	257
18	80	9	38	1280	129
19	96	9	39	1536	129
1A	112	17	3A	1792	257
1B	128	17	3B	2048	257
1C	144	25	3C	2304	385
1D	160	25	3D	2560	385
1E	192	33	3E	3072	513
1F	240	33	3F	3840	513

13.3.3 IIC Control Register (IIC1C)

	7	6	5	4	3	2	1	0
R	IICEN	IICIE	MST	TX	TXAK	0	0	0
W						RSTA		
Reset	0	0	0	0	0	0	0	0

= Unimplemented or Reserved

Figure 13-5. IIC Control Register (IIC1C)

Table 13-4. IIC1C Register Field Descriptions

Field	Description
7 IICEN	**IIC Enable** — The IICEN bit determines whether the IIC module is enabled. 0 IIC is not enabled. 1 IIC is enabled.
6 IICIE	**IIC Interrupt Enable** — The IICIE bit determines whether an IIC interrupt is requested. 0 IIC interrupt request not enabled. 1 IIC interrupt request enabled.
5 MST	**Master Mode Select** — The MST bit is changed from a 0 to a 1 when a START signal is generated on the bus and master mode is selected. When this bit changes from a 1 to a 0 a STOP signal is generated and the mode of operation changes from master to slave. 0 Slave Mode. 1 Master Mode.
4 TX	**Transmit Mode Select** — The TX bit selects the direction of master and slave transfers. In master mode this bit should be set according to the type of transfer required. Therefore, for address cycles, this bit will always be high. When addressed as a slave this bit should be set by software according to the SRW bit in the status register. 0 Receive. 1 Transmit.
3 TXAK	**Transmit Acknowledge Enable** — This bit specifies the value driven onto the SDA during data acknowledge cycles for both master and slave receivers. 0 An acknowledge signal will be sent out to the bus after receiving one data byte. 1 No acknowledge signal response is sent.
2 RSTA	**Repeat START** — Writing a one to this bit will generate a repeated START condition provided it is the current master. This bit will always be read as a low. Attempting a repeat at the wrong time will result in loss of arbitration.

13.3.4 IIC Status Register (IIC1S)

	7	6	5	4	3	2	1	0
R	TCF	IAAS	BUSY	ARBL	0	SRW	IICIF	RXAK
W								
Reset	1	0	0	0	0	0	0	0

= Unimplemented or Reserved

Figure 13-6. IIC Status Register (IIC1S)

Table 13-5. IIC1S Register Field Descriptions

Field	Description
7 TCF	**Transfer Complete Flag** — This bit is set on the completion of a byte transfer. Note that this bit is only valid during or immediately following a transfer to the IIC module or from the IIC module.The TCF bit is cleared by reading the IIC1D register in receive mode or writing to the IIC1D in transmit mode. 0 Transfer in progress. 1 Transfer complete.
6 IAAS	**Addressed as a Slave** — The IAAS bit is set when the calling address matches the programmed slave address. Writing the IIC1C register clears this bit. 0 Not addressed. 1 Addressed as a slave.
5 BUSY	**Bus Busy** — The BUSY bit indicates the status of the bus regardless of slave or master mode. The BUSY bit is set when a START signal is detected and cleared when a STOP signal is detected. 0 Bus is idle. 1 Bus is busy.
4 ARBL	**Arbitration Lost** — This bit is set by hardware when the arbitration procedure is lost. The ARBL bit must be cleared by software, by writing a one to it. 0 Standard bus operation. 1 Loss of arbitration.
2 SRW	**Slave Read/Write** — When addressed as a slave the SRW bit indicates the value of the R/W command bit of the calling address sent to the master. 0 Slave receive, master writing to slave. 1 Slave transmit, master reading from slave.
1 IICIF	**IIC Interrupt Flag** — The IICIF bit is set when an interrupt is pending. This bit must be cleared by software, by writing a one to it in the interrupt routine. One of the following events can set the IICIF bit: • One byte transfer completes • Match of slave address to calling address • Arbitration lost 0 No interrupt pending. 1 Interrupt pending.
0 RXAK	**Receive Acknowledge** — When the RXAK bit is low, it indicates an acknowledge signal has been received after the completion of one byte of data transmission on the bus. If the RXAK bit is high it means that no acknowledge signal is detected. 0 Acknowledge received. 1 No acknowledge received.

13.3.5 IIC Data I/O Register (IIC1D)

	7	6	5	4	3	2	1	0
R W	DATA							
Reset	0	0	0	0	0	0	0	0

Figure 13-7. IIC Data I/O Register (IIC1D)

Table 13-6. IIC1D Register Field Descriptions

Field	Description
7:0 DATA	**Data** — In master transmit mode, when data is written to the IIC1D, a data transfer is initiated. The most significant bit is sent first. In master receive mode, reading this register initiates receiving of the next byte of data.

NOTE

When transmitting out of master receive mode, the IIC mode should be switched before reading the IIC1D register to prevent an inadvertent initiation of a master receive data transfer.

In slave mode, the same functions are available after an address match has occurred.

Note that the TX bit in IIC1C must correctly reflect the desired direction of transfer in master and slave modes for the transmission to begin. For instance, if the IIC is configured for master transmit but a master receive is desired, then reading the IIC1D will not initiate the receive.

Reading the IIC1D will return the last byte received while the IIC is configured in either master receive or slave receive modes. The IIC1D does not reflect every byte that is transmitted on the IIC bus, nor can software verify that a byte has been written to the IIC1D correctly by reading it back.

In master transmit mode, the first byte of data written to IIC1D following assertion of MST is used for the address transfer and should comprise of the calling address (in bit 7–bit 1) concatenated with the required R/W bit (in position bit 0).

13.4 Functional Description

This section provides a complete functional description of the IIC module.

13.4.1 IIC Protocol

The IIC bus system uses a serial data line (SDA) and a serial clock line (SCL) for data transfer. All devices connected to it must have open drain or open collector outputs. A logic AND function is exercised on both lines with external pull-up resistors. The value of these resistors is system dependent.

Normally, a standard communication is composed of four parts:

- START signal
- Slave address transmission
- Data transfer
- STOP signal

The STOP signal should not be confused with the CPU STOP instruction. The IIC bus system communication is described briefly in the following sections and illustrated in Figure 13-8.

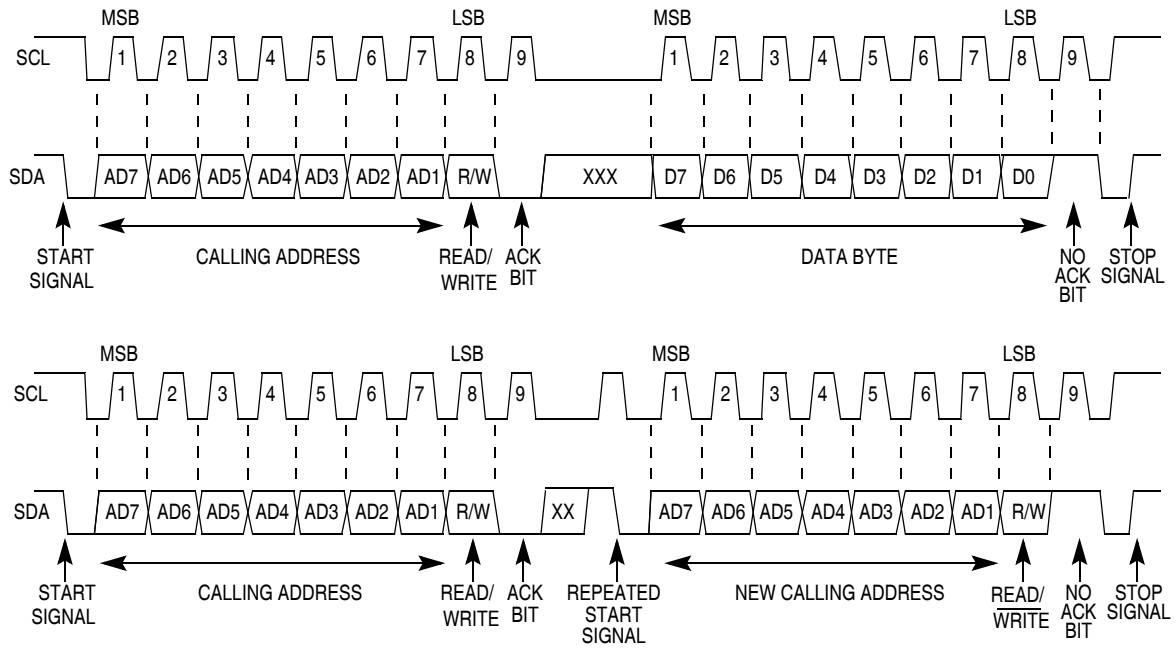

Figure 13-8. IIC Bus Transmission Signals

13.4.1.1 START Signal

When the bus is free; i.e., no master device is engaging the bus (both SCL and SDA lines are at logical high), a master may initiate communication by sending a START signal. As shown in Figure 13-8, a START signal is defined as a high-to-low transition of SDA while SCL is high. This signal denotes the beginning of a new data transfer (each data transfer may contain several bytes of data) and brings all slaves out of their idle states.

13.4.1.2 Slave Address Transmission

The first byte of data transferred immediately after the START signal is the slave address transmitted by the master. This is a seven-bit calling address followed by a R/W bit. The R/W bit tells the slave the desired direction of data transfer.

1 = Read transfer, the slave transmits data to the master.
0 = Write transfer, the master transmits data to the slave.

Only the slave with a calling address that matches the one transmitted by the master will respond by sending back an acknowledge bit. This is done by pulling the SDA low at the 9th clock (see Figure 13-8).

No two slaves in the system may have the same address. If the IIC module is the master, it must not transmit an address that is equal to its own slave address. The IIC cannot be master and slave at the same time. However, if arbitration is lost during an address cycle, the IIC will revert to slave mode and operate correctly even if it is being addressed by another master.

13.4.1.3 Data Transfer

Before successful slave addressing is achieved, the data transfer can proceed byte-by-byte in a direction specified by the R/W bit sent by the calling master.

All transfers that come after an address cycle are referred to as data transfers, even if they carry sub-address information for the slave device

Each data byte is 8 bits long. Data may be changed only while SCL is low and must be held stable while SCL is high as shown in Figure 13-8. There is one clock pulse on SCL for each data bit, the MSB being transferred first. Each data byte is followed by a 9th (acknowledge) bit, which is signalled from the receiving device. An acknowledge is signalled by pulling the SDA low at the ninth clock. In summary, one complete data transfer needs nine clock pulses.

If the slave receiver does not acknowledge the master in the 9th bit time, the SDA line must be left high by the slave. The master interprets the failed acknowledge as an unsuccessful data transfer.

If the master receiver does not acknowledge the slave transmitter after a data byte transmission, the slave interprets this as an end of data transfer and releases the SDA line.

In either case, the data transfer is aborted and the master does one of two things:

- Relinquishes the bus by generating a STOP signal.
- Commences a new calling by generating a repeated START signal.

13.4.1.4 STOP Signal

The master can terminate the communication by generating a STOP signal to free the bus. However, the master may generate a START signal followed by a calling command without generating a STOP signal first. This is called repeated START. A STOP signal is defined as a low-to-high transition of SDA while SCL at logical 1 (see Figure 13-8).

The master can generate a STOP even if the slave has generated an acknowledge at which point the slave must release the bus.

13.4.1.5 Repeated START Signal

As shown in Figure 13-8, a repeated START signal is a START signal generated without first generating a STOP signal to terminate the communication. This is used by the master to communicate with another slave or with the same slave in different mode (transmit/receive mode) without releasing the bus.

13.4.1.6 Arbitration Procedure

The IIC bus is a true multi-master bus that allows more than one master to be connected on it. If two or more masters try to control the bus at the same time, a clock synchronization procedure determines the bus clock, for which the low period is equal to the longest clock low period and the high is equal to the shortest one among the masters. The relative priority of the contending masters is determined by a data arbitration procedure, a bus master loses arbitration if it transmits logic 1 while another master transmits logic 0. The losing masters immediately switch over to slave receive mode and stop driving SDA output. In this case, the transition from master to slave mode does not generate a STOP condition. Meanwhile, a status bit is set by hardware to indicate loss of arbitration.

13.4.1.7 Clock Synchronization

Because wire-AND logic is performed on the SCL line, a high-to-low transition on the SCL line affects all the devices connected on the bus. The devices start counting their low period and after a device's clock has gone low, it holds the SCL line low until the clock high state is reached. However, the change of low to high in this device clock may not change the state of the SCL line if another device clock is still within its low period. Therefore, synchronized clock SCL is held low by the device with the longest low period. Devices with shorter low periods enter a high wait state during this time (see Figure 13-9). When all devices concerned have counted off their low period, the synchronized clock SCL line is released and pulled high. There is then no difference between the device clocks and the state of the SCL line and all the devices start counting their high periods. The first device to complete its high period pulls the SCL line low again.

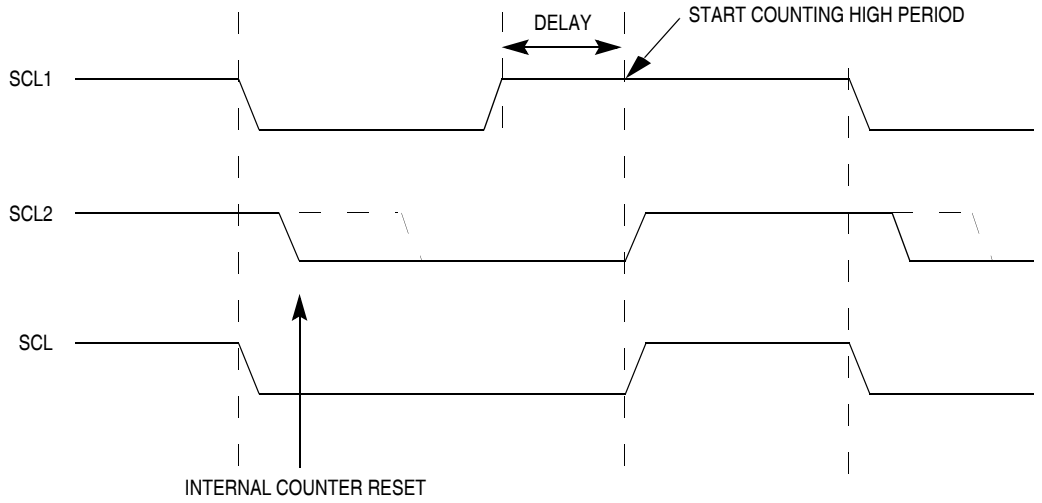

Figure 13-9. IIC Clock Synchronization

13.4.1.8 Handshaking

The clock synchronization mechanism can be used as a handshake in data transfer. Slave devices may hold the SCL low after completion of one byte transfer (9 bits). In such case, it halts the bus clock and forces the master clock into wait states until the slave releases the SCL line.

13.4.1.9 Clock Stretching

The clock synchronization mechanism can be used by slaves to slow down the bit rate of a transfer. After the master has driven SCL low the slave can drive SCL low for the required period and then release it. If the slave SCL low period is greater than the master SCL low period then the resulting SCL bus signal low period is stretched.

13.5 Resets

The IIC is disabled after reset. The IIC cannot cause an MCU reset.

13.6 Interrupts

The IIC generates a single interrupt.

An interrupt from the IIC is generated when any of the events in Table 13-7 occur provided the IICIE bit is set. The interrupt is driven by bit IICIF (of the IIC status register) and masked with bit IICIE (of the IIC control register). The IICIF bit must be cleared by software by writing a one to it in the interrupt routine. The user can determine the interrupt type by reading the status register.

Table 13-7. Interrupt Summary

Interrupt Source	Status	Flag	Local Enable
Complete 1-byte transfer	TCF	IICIF	IICIE
Match of received calling address	IAAS	IICIF	IICIE
Arbitration Lost	ARBL	IICIF	IICIE

13.6.1 Byte Transfer Interrupt

The TCF (transfer complete flag) bit is set at the falling edge of the 9th clock to indicate the completion of byte transfer.

13.6.2 Address Detect Interrupt

When the calling address matches the programmed slave address (IIC address register), the IAAS bit in the status register is set. The CPU is interrupted provided the IICIE is set. The CPU must check the SRW bit and set its Tx mode accordingly.

13.6.3 Arbitration Lost Interrupt

The IIC is a true multi-master bus that allows more than one master to be connected on it. If two or more masters try to control the bus at the same time, the relative priority of the contending masters is determined by a data arbitration procedure. The IIC module asserts this interrupt when it loses the data arbitration process and the ARBL bit in the status register is set.

Arbitration is lost in the following circumstances:

- SDA sampled as a low when the master drives a high during an address or data transmit cycle.
- SDA sampled as a low when the master drives a high during the acknowledge bit of a data receive cycle.
- A START cycle is attempted when the bus is busy.
- A repeated START cycle is requested in slave mode.
- A STOP condition is detected when the master did not request it.

This bit must be cleared by software by writing a one to it.

13.7 Initialization/Application Information

Module Initialization (Slave)

1. Write: IICA
   — to set the slave address
2. Write: IICC
   — to enable IIC and interrupts
3. Initialize RAM variables (IICEN = 1 and IICIE = 1) for transmit data
4. Initialize RAM variables used to achieve the routine shown in Figure 13-11

Module Initialization (Master)

1. Write: IICF
   — to set the IIC baud rate (example provided in this chapter)
2. Write: IICC
   — to enable IIC and interrupts
3. Initialize RAM variables (IICEN = 1 and IICIE = 1) for transmit data
4. Initialize RAM variables used to achieve the routine shown in Figure 13-11
5. Write: IICC
   — to enable TX
6. Write: IICC
   — to enable MST (master mode)
7. Write: IICD
   — with the address of the target slave. (The LSB of this byte will determine whether the communication is master receive or transmit.)

Module Use

The routine shown in Figure 13-11 can handle both master and slave IIC operations. For slave operation, an incoming IIC message that contains the proper address will begin IIC communication. For master operation, communication must be initiated by writing to the IICD register.

Register Model

IICA	ADDR							0

Address to which the module will respond when addressed as a slave (in slave mode)

IICF	MULT	ICR

Baud rate = BUSCLK / (2 x MULT x (SCL DIVIDER))

IICC	IICEN	IICIE	MST	TX	TXAK	RSTA	0	0

Module configuration

IICS	TCF	IAAS	BUSY	ARBL	0	SRW	IICIF	RXAK

Module status flags

IICD	DATA

Data register; Write to transmit IIC data read to read IIC data

Figure 13-10. IIC Module Quick Start

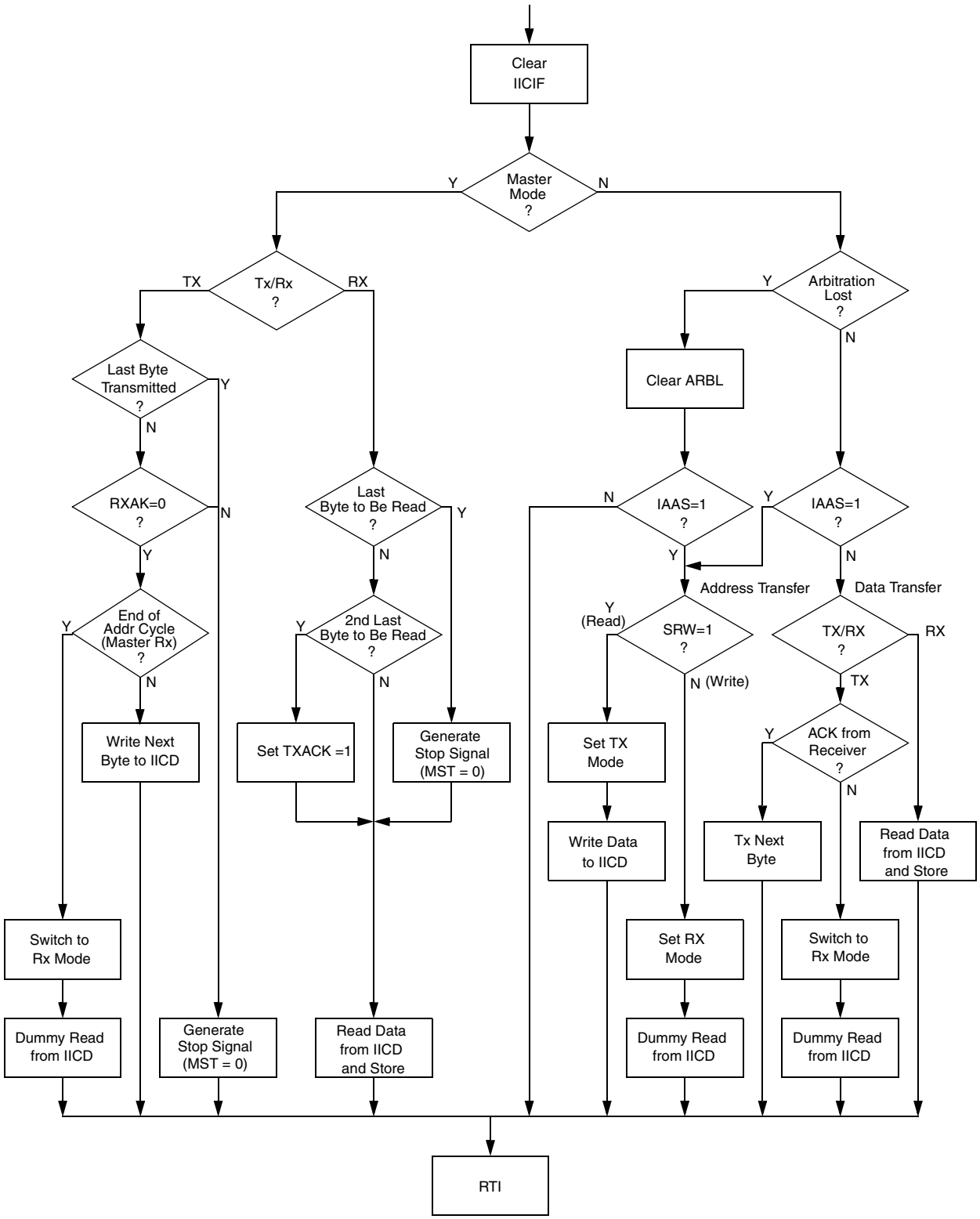

Figure 13-11. Typical IIC Interrupt Routine

Chapter 14
Analog-to-Digital Converter (S08ATDV3)

The MC9S08GBxxA/GTxxA provides one 8-channel analog-to-digital (ATD) module. The eight ATD channels share port B. Each channel individually can be configured for general-purpose I/O or for ATD functionality. All features of the ATD module as described in this section are available on the MC9S08GBxxA/GTxxA. Electrical parametric information for the ATD may be found in Appendix A, “Electrical Characteristics.”

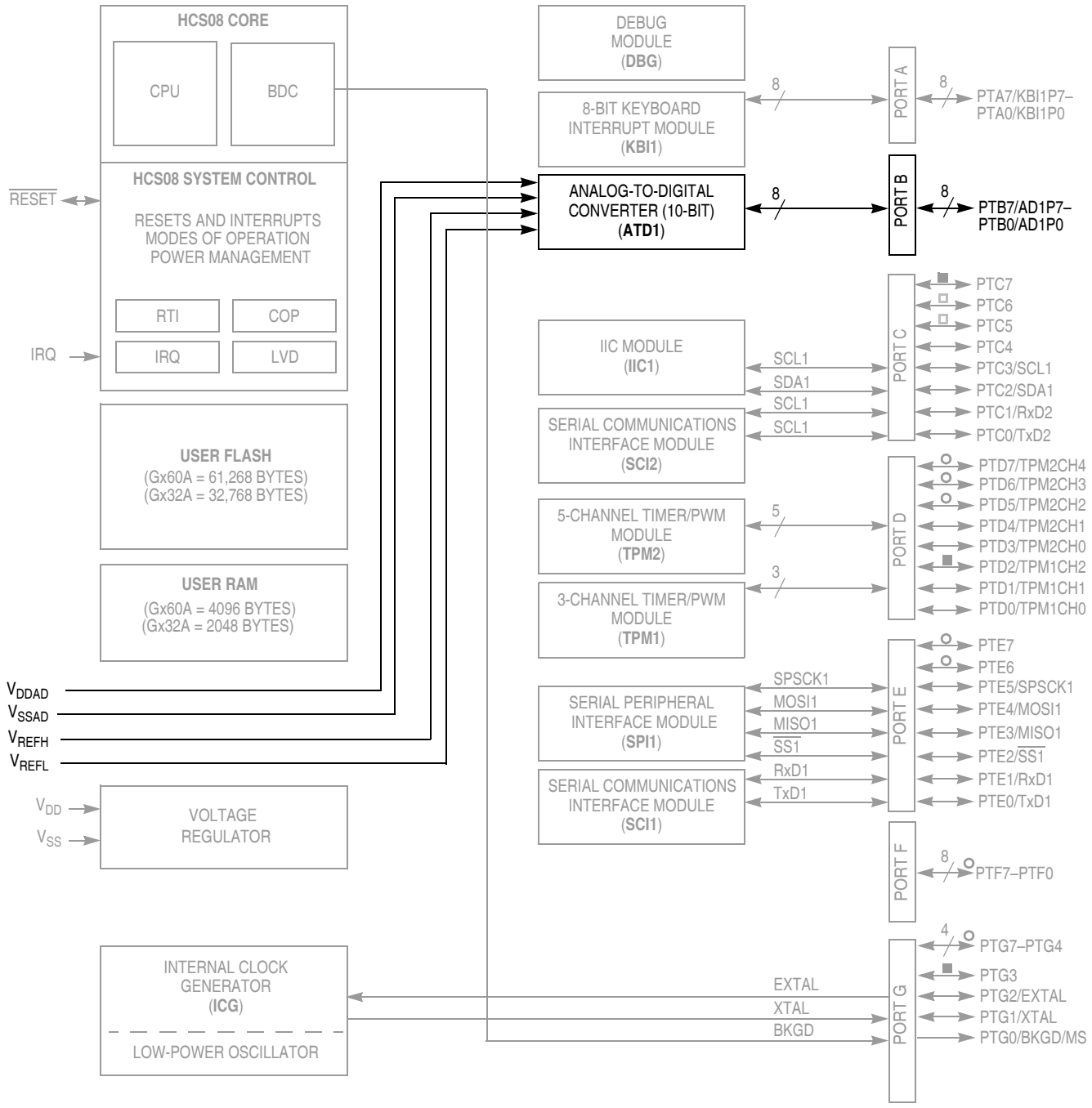

Note: Not all pins are bonded out in all packages. See Table 2-2 for complete details.

Block Diagram Symbol Key:
○ = Not connected in 48-, 44-, and 42-pin packages
■ = Not connected in 44- and 42-pin packages
□ = Not connected in 42-pin packages

Figure 14-1. MC9S08GB60A Block Diagram Highlighting ATD Block and Pins

14.1 Introduction

The ATD module is an analog-to-digital converter with a successive approximation register (SAR) architecture with sample and hold.

14.1.1 Features

- 8-/10-bit resolution
- 14.0 µsec, 10-bit single conversion time at a conversion frequency of 2 MHz
- Left-/right-justified result data
- Left-justified signed data mode
- Conversion complete flag or conversion complete interrupt generation
- Analog input multiplexer for up to eight analog input channels
- Single or continuous conversion mode

14.1.2 Modes of Operation

The ATD has two modes for low power

- Stop mode
- Power-down mode

14.1.2.1 Stop Mode

When the MCU goes into stop mode, the MCU stops the clocks and the ATD analog circuitry is turned off, placing the module into a low-power state. Once in stop mode, the ATD module aborts any single or continuous conversion in progress. Upon exiting stop mode, no conversions occur and the registers have their previous values. As long as the ATDPU bit is set prior to entering stop mode, the module is reactivated coming out of stop.

14.1.2.2 Power Down Mode

Clearing the ATDPU bit in register ATD1C also places the ATD module in a low-power state. The ATD conversion clock is disabled and the analog circuitry is turned off, placing the module in power-down mode. (This mode does not remove power to the ATD module.) Once in power-down mode, the ATD module aborts any conversion in progress. Upon setting the ATDPU bit, the module is reactivated. During power-down mode, the ATD registers are still accessible.

Note that the reset state of the ATDPU bit is zero. Therefore, the module is reset into the power-down state.

14.1.3 Block Diagram

Figure 14-2 illustrates the functional structure of the ATD module.

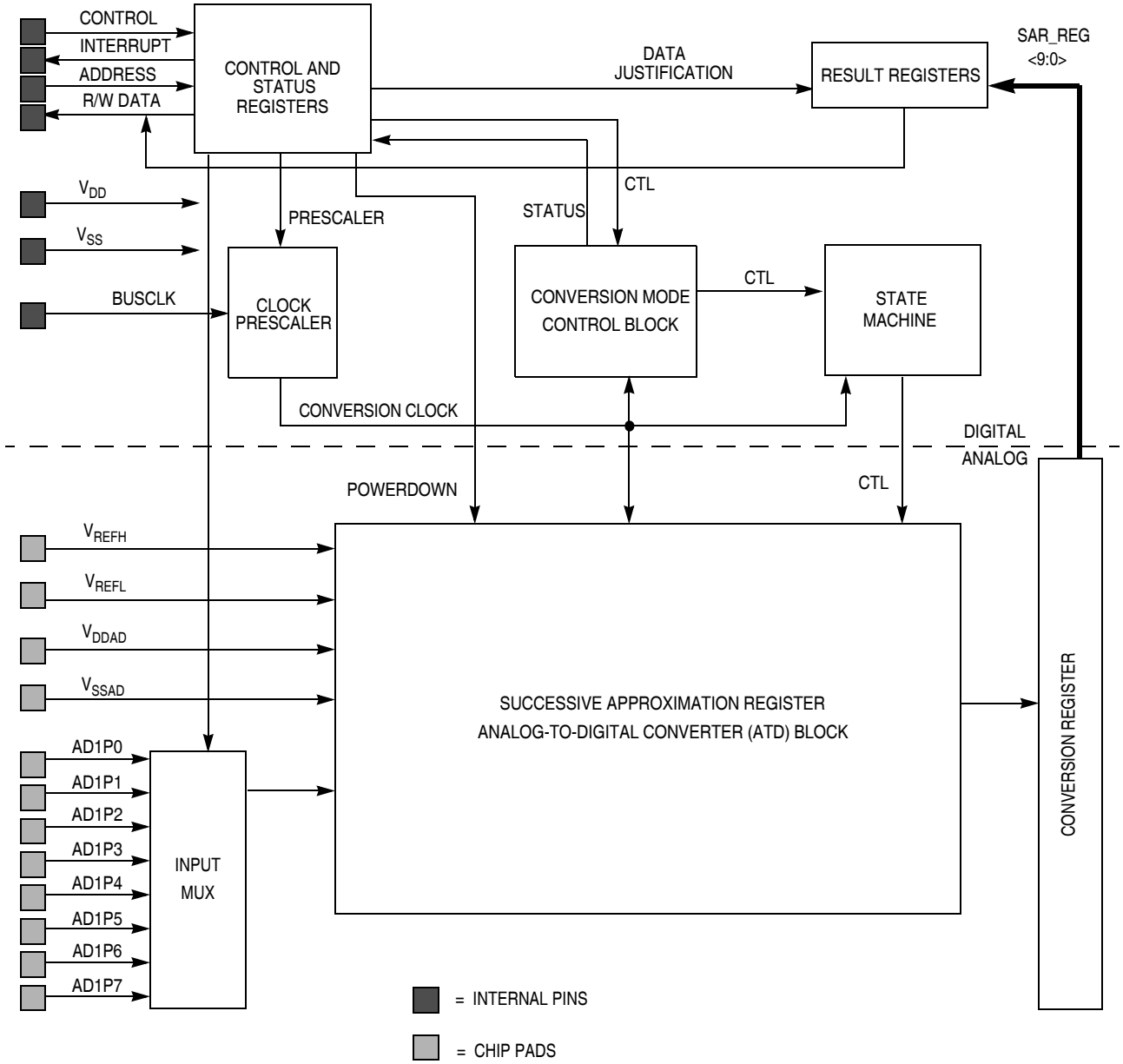

Figure 14-2. ATD Block Diagram

14.2 Signal Description

14.2.1 Overview

The ATD supports eight input channels and requires 4 supply/reference/ground pins. These pins are listed in Table 14-1.

Table 14-1. Signal Properties

Name	Function
AD7–AD0	Channel input pins
V_{REFH}	High reference voltage for ATD converter
V_{REFL}	Low reference voltage for ATD converter
V_{DDAD}	ATD power supply voltage
V_{SSAD}	ATD ground supply voltage

14.2.1.1 Channel Input Pins — AD1P7–AD1P0

The channel pins are used as the analog input pins of the ATD. Each pin is connected to an analog switch which serves as the signal gate into the sample submodule.

14.2.1.2 ATD Reference Pins — V_{REFH}, V_{REFL}

These pins serve as the source for the high and low reference potentials for the converter. Separation from the power supply pins accommodates the filtering necessary to achieve the accuracy of which the system is capable.

14.2.1.3 ATD Supply Pins — V_{DDAD}, V_{SSAD}

These two pins are used to supply power and ground to the analog section of the ATD. Dedicated power is required to isolate the sensitive analog circuitry from the normal levels of noise present on digital power supplies.

NOTE

V_{DDAD1} and V_{DD} must be at the same potential. Likewise, V_{SSAD1} and V_{SS} must be at the same potential.

14.3 Functional Description

The ATD uses a successive approximation register (SAR) architecture. The ATD contains all the necessary elements to perform a single analog-to-digital conversion.

A write to the ATD1SC register initiates a new conversion. A write to the ATD1C register will interrupt the current conversion but it will not initiate a new conversion. A write to the ATD1PE register will also abort the current conversion but will not initiate a new conversion. If a conversion is already running when a write to the ATD1SC register is made, it will be aborted and a new one will be started.

14.3.1 Mode Control

The ATD has a mode control unit to communicate with the sample and hold (S/H) machine and the SAR machine when necessary to collect samples and perform conversions. The mode control unit signals the S/H machine to begin collecting a sample and for the SAR machine to begin receiving a sample. At the end of the sample period, the S/H machine signals the SAR machine to begin the analog-to-digital conversion process. The conversion process is terminated when the SAR machine signals the end of

conversion to the mode control unit. For V_{REFL} and V_{REFH}, the SAR machine uses the reference potentials to set the sampled signal level within itself without relying on the S/H machine to deliver them.

The mode control unit organizes the conversion, specifies the input sample channel, and moves the digital output data from the SAR register to the result register. The result register consists of a dual-port register. The SAR register writes data into the register through one port while the module data bus reads data out of the register through the other port.

14.3.2 Sample and Hold

The S/H machine accepts analog signals and stores them as capacitor charge on a storage node located in the SAR machine. Only one sample can be held at a time so the S/H machine and the SAR machine can not run concurrently even though they are independent machines. Figure 14-3 shows the placement of the various resistors and capacitors.

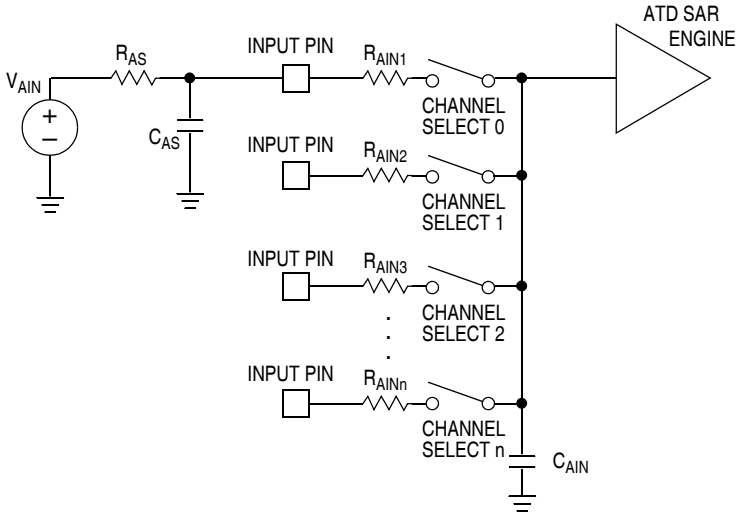

Figure 14-3. Resistor and Capacitor Placement

When the S/H machine is not sampling, it disables its own internal clocks.The input analog signals are unipolar. The signals must fall within the potential range of V_{SSAD} to V_{DDAD}. The S/H machine is not required to perform special conversions (i.e., convert V_{REFL} and V_{REFH}).

Proper sampling is dependent on the following factors:

- Analog source impedance (the real portion, R_{AS} – see Appendix A, “Electrical Characteristics”) — This is the resistive (or real, in the case of high frequencies) portion of the network driving the analog input voltage V_{AIN}.
- Analog source capacitance (C_{AS}) — This is the filtering capacitance on the analog input, which (if large enough) may help the analog source network charge the ATD input in the case of high R_{AS}.
- ATD input resistance (R_{AIN} – maximum value 7 kΩ) — This is the internal resistance of the ATD circuit in the path between the external ATD input and the ATD sample and hold circuit. This resistance varies with temperature, voltage, and process variation but a worst case number is necessary to compute worst case sample error.

- ATD input capacitance (C_{AIN} – maximum value 50 pF) — This is the internal capacitance of the ATD sample and hold circuit. This capacitance varies with temperature, voltage, and process variation but a worst case number is necessary to compute worst case sample error.
- ATD conversion clock frequency (f_{ATDCLK} – maximum value 2 MHz) — This is the frequency of the clock input to the ATD and is dependent on the bus clock frequency and the ATD prescaler. This frequency determines the width of the sample window, which is 14 ATDCLK cycles.
- Input sample frequency (f_{SAMP} – see Appendix A, "Electrical Characteristics") — This is the frequency that a given input is sampled.
- Delta-input sample voltage (ΔV_{SAMP}) — This is the difference between the current input voltage (intended for conversion) and the previously sampled voltage (which may be from a different channel). In non-continuous convert mode, this is assumed to be the greater of ($V_{REFH} - V_{AIN}$) and ($V_{AIN} - V_{REFL}$). In continuous convert mode, 5 LSB should be added to the known difference to account for leakage and other losses.
- Delta-analog input voltage (ΔV_{AIN}) — This is the difference between the current input voltage and the input voltage during the last conversion on a given channel. This is based on the slew rate of the input.

In cases where there is no external filtering capacitance, the sampling error is determined by the number of time constants of charging and the change in input voltage relative to the resolution of the ATD:

$$\text{\# of time constants } (\tau) = (14 / f_{ATDCLK}) / ((R_{AS} + R_{AIN}) * C_{AIN}) \qquad \textit{Eqn. 14-1}$$

$$\text{sampling error in LSB } (E_S) = 2^N * (\Delta V_{SAMP} / (V_{REFH} - V_{REFL})) * e^{-\tau}$$

The maximum sampling error (assuming maximum change on the input voltage) will be:

$$E_S = (3.6/3.6) * e^{-(14/((7\ k + 10\ k) * 50\ p * 2\ M))} * 1024 = 0.271 \text{ LSB} \qquad \textit{Eqn. 14-2}$$

In the case where an external filtering capacitance is applied, the sampling error can be reduced based on the size of the source capacitor (C_{AS}) relative to the analog input capacitance (C_{AIN}). Ignoring the analog source impedance (R_{AS}), C_{AS} will charge C_{AIN} to a value of:

$$E_S = 2^N * (\Delta V_{SAMP} / (V_{REFH} - V_{REFL})) * (C_{AIN} / (C_{AIN} + C_{AS})) \qquad \textit{Eqn. 14-3}$$

In the case of a 0.1 µF C_{AS}, a worst case sampling error of 0.5 LSB is achieved regardless of R_{AS}. However, in the case of repeated conversions at a rate of f_{SAMP}, R_{AS} must re-charge C_{AS}. This recharge is continuous and controlled only by R_{AS} (not R_{AIN}), and reduces the overall sampling error to:

$$E_S = 2^N * \{(\Delta V_{AIN} / (V_{REFH} - V_{REFL})) * e^{-(1 / (f_{SAMP} * R_{AS} * C_{AS})} + (\Delta V_{SAMP} / (V_{REFH} - V_{REFL})) * \text{Min}[(C_{AIN} / (C_{AIN} + C_{AS})), e^{-(1 / (f_{ATDCLK} * (R_{AS} + R_{AIN}) * C_{AIN})}]\} \qquad \textit{Eqn. 14-4}$$

This is a worst case sampling error which does not account for R_{AS} recharging the combination of C_{AS} and C_{AIN} during the sample window. It does illustrate that high values of R_{AS} (>10 kΩ) are possible if a large C_{AS} is used and sufficient time to recharge C_{AS} is provided between samples. In order to achieve accuracy specified under the worst case conditions of maximum ΔV_{SAMP} and minimum C_{AS}, R_{AS} must be less than the maximum value of 10 kΩ. The maximum value of 10 kΩ for R_{AS} is to ensure low sampling error in the worst case condition of maximum ΔV_{SAMP} and minimum C_{AS}.

14.3.3 Analog Input Multiplexer

The analog input multiplexer selects one of the eight external analog input channels to generate an analog sample. The analog input multiplexer includes negative stress protection circuitry which prevents cross-talk between channels when the applied input potentials are within specification. Only analog input signals within the potential range of V_{REFL} to V_{REFH} (ATD reference potentials) will result in valid ATD conversions.

14.3.4 ATD Module Accuracy Definitions

Figure 14-4 illustrates an ideal ATD transfer function. The horizontal axis represents the ATD input voltage in millivolts. The vertical axis the conversion result code. The ATD is specified with the following figures of merit:

- Number of bits (N) — The number of bits in the digitized output
- Resolution (LSB) — The resolution of the ATD is the step size of the ideal transfer function. This is also referred to as the ideal code width, or the difference between the transition voltages to a given code and to the next code. This unit, known as 1LSB, is equal to

$$1LSB = (V_{REFH} - V_{REFL}) / 2^N \quad \textit{Eqn. 14-5}$$

- Inherent quantization error (E_Q) — This is the error caused by the division of the perfect ideal straight-line transfer function into the quantized ideal transfer function with 2^N steps. This error is ± 1/2 LSB.
- Differential non-linearity (DNL) — This is the difference between the current code width and the ideal code width (1LSB). The current code width is the difference in the transition voltages to the current code and to the next code. A negative DNL means the transfer function spends less time at the current code than ideal; a positive DNL, more. The DNL cannot be less than –1.0; a DNL of greater than 1.0 reduces the effective number of bits by 1.
- Integral non-linearity (INL) — This is the difference between the transition voltage to the current code and the transition to the corresponding code on the adjusted transfer curve. INL is a measure of how straight the line is (how far it deviates from a straight line). The adjusted ideal transition voltage is:

Eqn. 14-6

$$\text{Adjusted Ideal Trans. V} = \frac{(\text{Current Code - 1/2})}{2^N} * ((V_{REFH} + E_{FS}) - (V_{REFL} + E_{ZS}))$$

- Zero scale error (E_{ZS}) — This is the difference between the transition voltage to the first valid code and the ideal transition to that code. Normally, it is defined as the difference between the actual and ideal transition to code 0x001, but in some cases the first transition may be to a higher code. The ideal transition to any code is:

Eqn. 14-7

$$\text{Ideal Transition V} = \frac{(\text{Current Code - 1/2})}{2^N} *(V_{REFH} - V_{REFL})$$

- Full scale error (E_{FS}) — This is the difference between the transition voltage to the last valid code and the ideal transition to that code. Normally, it is defined as the difference between the actual and ideal transition to code 0x3FF, but in some cases the last transition may be to a lower code. The ideal transition to any code is:

Eqn. 14-8

$$\text{Ideal Transition V} = \frac{(\text{Current Code - 1/2})}{2^N} *(V_{REFH} - V_{REFL})$$

- Total unadjusted error (E_{TU}) — This is the difference between the transition voltage to a given code and the ideal straight-line transfer function. An alternate definition (with the same result) is the difference between the actual transfer function and the ideal straight-line transfer function. This measure of error includes inherent quantization error and all forms of circuit error (INL, DNL, zero-scale, and full-scale) except input leakage error, which is not due to the ATD.
- Input leakage error (E_{IL}) — This is the error between the transition voltage to the current code and the ideal transition to that code that is the result of input leakage across the real portion of the impedance of the network that drives the analog input. This error is a system-observable error which is not inherent to the ATD, so it is not added to total error. This error is:

$$E_{IL} \text{ (in V)} = \text{input leakage} * R_{AS}$$ ***Eqn. 14-9***

There are two other forms of error which are not specified which can also affect ATD accuracy. These are:

- Sampling error (E_S) — The error due to inadequate time to charge the ATD circuitry
- Noise error (E_N) — The error due to noise on V_{AIN}, V_{REFH}, or V_{REFL} due to either direct coupling (noise source capacitively coupled directly on the signal) or power supply (V_{DDAD}, V_{SSAD}, V_{DD}, and V_{SS}) noise interfering with the ATD's ability to resolve the input accurately. The error due to internal sources can be reduced (and specified operation achieved) by operating the ATD conversion in wait mode and ceasing all IO activity. Reducing the error due to external sources is dependent on system activity and board layout.

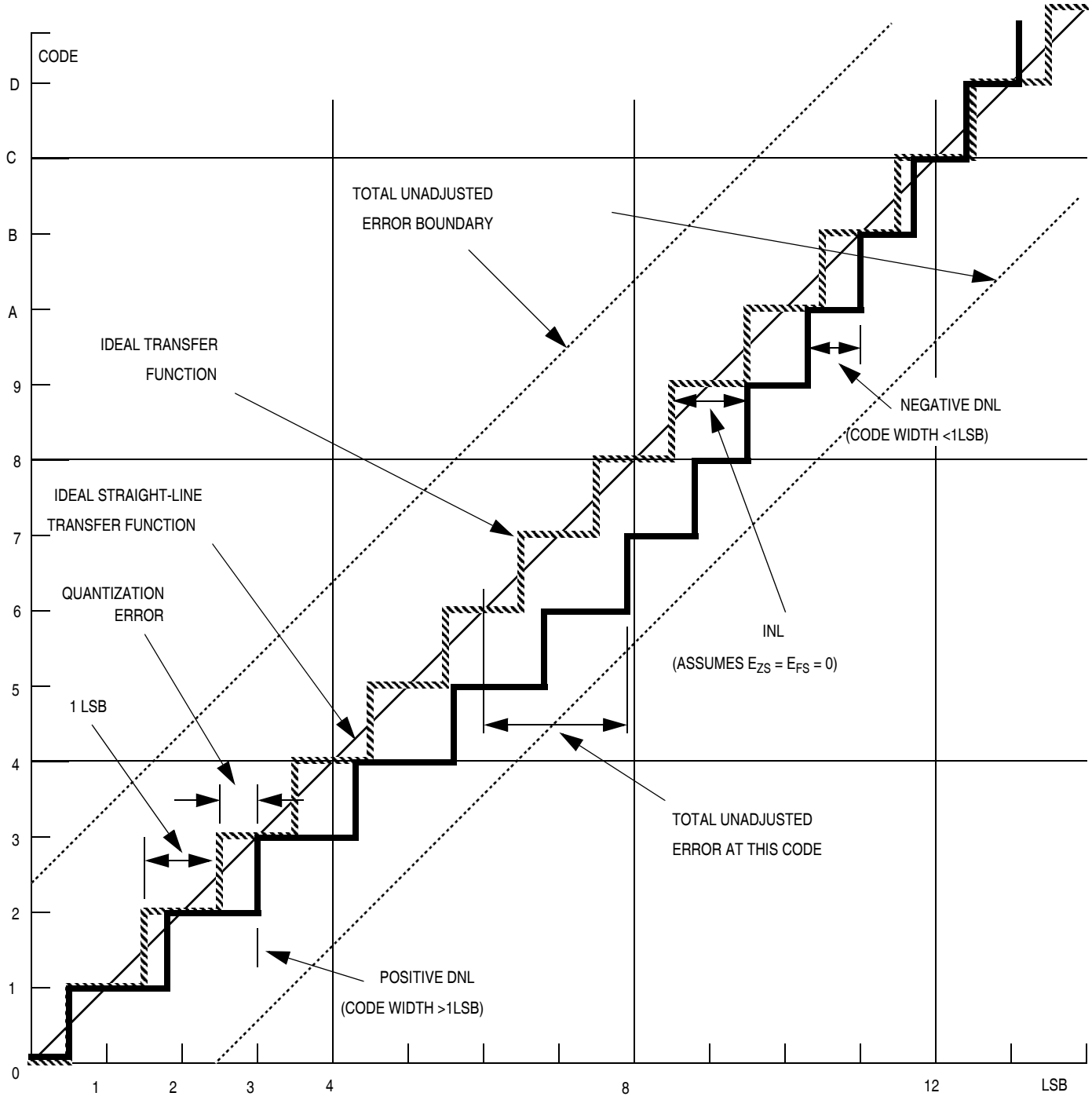

NOTES: Graph is for example only and may not represent actual performance

Figure 14-4. ATD Accuracy Definitions

14.4 Resets

The ATD module is reset on system reset. If the system reset signal is activated, the ATD registers are initialized back to their reset state and the ATD module is powered down. This occurs as a function of the register file initialization; the reset definition of the ATDPU bit (power down bit) is zero or disabled.

The MCU places the module back into an initialized state. If the module is performing a conversion, the current conversion is terminated, the conversion complete flag is cleared, and the SAR register bits are cleared. Any pending interrupts are also cancelled. Note that the control, test, and status registers are initialized on reset; the initialized register state is defined in the register description section of this specification.

Enabling the module (using the ATDPU bit) does not cause the module to reset since the register file is not initialized. Finally, writing to control register ATD1C does not cause the module to reset; the current conversion will be terminated.

14.5 Interrupts

The ATD module originates interrupt requests and the MCU handles or services these requests. Details on how the ATD interrupt requests are handled can be found in Chapter 5, “Resets, Interrupts, and System Configuration”.

The ATD interrupt function is enabled by setting the ATDIE bit in the ATD1SC register. When the ATDIE bit is set, an interrupt is generated at the end of an ATD conversion and the ATD result registers (ATD1RH and ATD1RL) contain the result data generated by the conversion. If the interrupt function is disabled (ATDIE = 0), then the CCF flag must be polled to determine when a conversion is complete.

The interrupt will remain pending as long as the CCF flag is set. The CCF bit is cleared whenever the ATD status and control (ATD1SC) register is written. The CCF bit is also cleared whenever the ATD result registers (ATD1RH or ATD1RL) are read.

Table 14-2. Interrupt Summary

Interrupt	Local Enable	Description
CCF	ATDIE	Conversion complete

14.6 ATD Registers and Control Bits

The ATD has seven registers which control ATD functions.

Refer to the direct-page register summary in Chapter 4, “Memory” of this data sheet for the absolute address assignments for all ATD registers. This section refers to registers and control bits only by their names. A Freescale-provided equate or header file is used to translate these names into the appropriate absolute addresses.

14.6.1 ATD Control (ATDC)

Writes to the ATD control register will abort the current conversion, but will not start a new conversion.

	7	6	5	4	3	2	1	0
R W	ATDPU	DJM	RES8	SGN	PRS			
Reset	0	0	0	0	0	0	0	0

Figure 14-5. ATD Control Register (ATD1C)

Table 14-3. ATD1C Field Descriptions

Field	Description
7 ATDPU	**ATD Power Up** — This bit provides program on/off control over the ATD, reducing power consumption when the ATD is not being used. When cleared, the ATDPU bit aborts any conversion in progress. 0 Disable the ATD and enter a low-power state. 1 ATD functionality.
6 DJM	**Data Justification Mode** — This bit determines how the 10-bit conversion result data maps onto the ATD result register bits. When RES8 is set, bit DJM has no effect and the 8-bit result is always located in ATD1RH. See Section 14.6.3, "ATD Result Data (ATD1RH, ATD1RL)," for details. The effect of the DJM bit on the result is shown in Table 14-4. 0 Result register data is left justified. 1 Result register data is right justified.
5 RES8	**ATD Resolution Select** — This bit determines the resolution of the ATD converter, 8-bits or 10-bits. The ATD converter has the accuracy of a 10-bit converter. However, if 8-bit compatibility is required, selecting 8-bit resolution will map result data bits 9-2 onto ATD1RH bits 7-0. The effect of the RES8 bit on the result is shown in Table 14-4. 0 10-bit resolution selected. 1 8-bit resolution selected.
4 SGN	**Signed Result Select** — This bit determines whether the result will be signed or unsigned data. Signed data is represented as 2's complement data and is achieved by complementing the MSB of the result. Signed data mode can be used only when the result is left justified (DJM = 0) and is not available for right-justified mode (DJM = 1). When a signed result is selected, the range for conversions becomes –512 (0x200) to 511 (0x1FF) for 10-bit resolution and –128 (0x80) to 127 (0x7F) for 8-bit resolution. The effect of the SGN bit on the result is shown in Table 14-4. 0 Left justified result data is unsigned. 1 Left justified result data is signed.
3:0 PRS	**Prescaler Rate Select** — This field of bits determines the prescaled factor for the ATD conversion clock. Table 14-5 illustrates the divide-by operation and the appropriate range of bus clock frequencies.

Table 14-4. Available Result Data Formats

RES8	DJM	SGN	Data Formats of Result	Analog Input $V_{REFH} = V_{DDA}$, $V_{REFL} = V_{SSA}$ ATD1RH:ATD1RL	
				V_{DDA}	V_{SSA}
1	0	0	8-bit : left justified : unsigned	0xFF:0x00	0x00:0x00
1	0	1	8-bit : left justified : signed	0x7F:0x00	0x80:0x00
1	1	X[1]	8-bit : left justified[2] : unsigned	0xFF:0x00	0x00:0x00
0	0	0	10-bit : left justified : unsigned	0xFF:0xC0	0x00:0x00
0	0	1	10-bit : left justified : signed	0x7F:0xC0	0x80:0x00
0	1	X[1]	10-bit : right justified : unsigned	0x03:0xFF	0x00:0x00

[1] The SGN bit is only effective when DJM = 0. When DJM = 1, SGN is ignored.
[2] 8-bit results are always in ATD1RH.

Table 14-5. Clock Prescaler Values

PRS	Factor = (PRS +1) × 2	Max Bus Clock MHz (2 MHz max ATD Clock)[1]	Max Bus Clock MHz (1 MHz max ATD Clock)[2]	Min Bus Clock[3] MHz (500 kHz min ATD Clock)
0000	2	4	2	1
0001	4	8	4	2
0010	6	12	6	3
0011	8	16	8	4
0100	10	20	10	5
0101	12	20	12	6
0110	14	20	14	7
0111	16	20	16	8
1000	18	20	18	9
1001	20	20	20	10
1010	22	20	20	11
1011	24	20	20	12
1100	26	20	20	13
1101	28	20	20	14
1110	30	20	20	15
1111	32	20	20	16

1 Maximum ATD conversion clock frequency is 2 MHz. The max bus clock frequency is computed from the max ATD conversion clock frequency times the indicated prescaler setting; i.e., for a PRS of 0, max bus clock = 2 (max ATD conversion clock frequency) × 2 (Factor) = 4 MHz.

2 Use these settings if the maximum desired ATD conversion clock frequency is 1 MHz. The max bus clock frequency is computed from the max ATD conversion clock frequency times the indicated prescaler setting; i.e., for a PRS of 0, max bus clock = 1 (max ATD conversion clock frequency) × 2 (Factor) = 2 MHz.

3 Minimum ATD conversion clock frequency is 500 kHz. The min bus clock frequency is computed from the min ATD conversion clock frequency times the indicated prescaler setting; i.e., for a PRS of 1, min bus clock = 0.5 (min ATD conversion clock frequency) × 2 (Factor) = 1 MHz.

14.6.2 ATD Status and Control (ATD1SC)

Writes to the ATD status and control register clears the CCF flag, cancels any pending interrupts, and initiates a new conversion.

	7	6	5	4	3	2	1	0
R	CCF	ATDIE	ATDCO	ATDCH				
W								
Reset	0	0	0	0	0	0	0	1

= Unimplemented or Reserved

Figure 14-6. ATD Status and Control Register (ATD1SC)

Table 14-6. ATD1SC Field Descriptions

Field	Description
7 CCF	**Conversion Complete Flag** — The CCF is a read-only bit which is set each time a conversion is complete. The CCF bit is cleared whenever the ATD1SC register is written. It is also cleared whenever the result registers, ATD1RH or ATD1RL, are read. 0 Current conversion is not complete. 1 Current conversion is complete.
6 ATDIE	**ATD Interrupt Enabled** — When this bit is set, an interrupt is generated upon completion of an ATD conversion. At this time, the result registers contain the result data generated by the conversion. The interrupt will remain pending as long as the conversion complete flag CCF is set. If the ATDIE bit is cleared, then the CCF bit must be polled to determine when the conversion is complete. Note that system reset clears pending interrupts. 0 ATD interrupt disabled. 1 ATD interrupt enabled.
5 ATDCO	**ATD Continuous Conversion** — When this bit is set, the ATD will convert samples continuously and update the result registers at the end of each conversion. When this bit is cleared, only one conversion is completed between writes to the ATD1SC register. 0 Single conversion mode. 1 Continuous conversion mode.
4:0 ATDCH	**Analog Input Channel Select** — This field of bits selects the analog input channel whose signal is sampled and converted to digital codes. Table 14-7 lists the coding used to select the various analog input channels.

Table 14-7. Analog Input Channel Select Coding

ATDCH	Analog Input Channel
00	AD0
01	AD1
02	AD2
03	AD3
04	AD4
05	AD5
06	AD6
07	AD7
08–1D	Reserved (default to V_{REFL})
1E	V_{REFH}
1F	V_{REFL}

14.6.3 ATD Result Data (ATD1RH, ATD1RL)

For left-justified mode, result data bits 9–2 map onto bits 7–0 of ATD1RH, result data bits 1 and 0 map onto ATD1RL bits 7 and 6, where bit 7 of ATD1RH is the most significant bit (MSB).

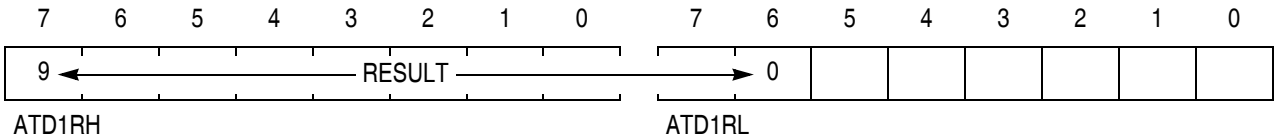

Figure 14-7. Left-Justified Mode

For right-justified mode, result data bits 9 and 8 map onto bits 1 and 0 of ATD1RH, result data bits 7–0 map onto ATD1RL bits 7–0, where bit 1 of ATD1RH is the most significant bit (MSB).

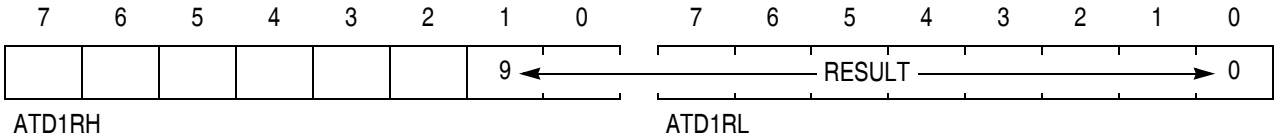

Figure 14-8. Right-Justified Mode

The ATD 10-bit conversion results are stored in two 8-bit result registers, ATD1RH and ATD1RL. The result data is formatted either left or right justified where the format is selected using the DJM control bit in the ATD1C register. The 10-bit result data is mapped either between ATD1RH bits 7–0 and ATD1RL bits 7–6 (left justified), or ATD1RH bits 1–0 and ATD1RL bits 7–0 (right justified).

For 8-bit conversions, the 8-bit result is always located in ATD1RH bits 7–0, and the ATD1RL bits read 0. For 10-bit conversions, the six unused bits always read 0.

The ATD1RH and ATD1RL registers are read-only.

14.6.4 ATD Pin Enable (ATD1PE)

The ATD pin enable register allows the pins dedicated to the ATD module to be configured for ATD usage. A write to this register will abort the current conversion but will not initiate a new conversion. If the ATDPEx bit is 0 (disabled for ATD usage) but the corresponding analog input channel is selected via the ATDCH bits, the ATD will not convert the analog input but will instead convert V_{REFL} placing zeroes in the ATD result registers.

	7	6	5	4	3	2	1	0
R W	ATDPE7	ATDPE6	ATDPE5	ATDPE4	ATDPE3	ATDPE2	ATDPE1	ATDPE0
Reset	0	0	0	0	0	0	0	0

Figure 14-9. ATD Pin Enable Register (ATD1PE)

Table 14-8. ATD1PE Field Descriptions

Field	Description
7 ATDPE[7:0]	**ATD Pin 7–0 Enables** 0 Pin disabled for ATD usage. 1 Pin enabled for ATD usage.

Chapter 15
Development Support

15.1 Introduction

Development support systems in the HCS08 include the background debug controller (BDC) and the on-chip debug module (DBG). The BDC provides a single-wire debug interface to the target MCU that provides a convenient interface for programming the on-chip flash and other nonvolatile memories. The BDC is also the primary debug interface for development and allows non-intrusive access to memory data and traditional debug features such as CPU register modify, breakpoints, and single instruction trace commands.

In the HCS08 Family, address and data bus signals are not available on external pins (not even in test modes). Debug is done through commands fed into the target MCU via the single-wire background debug interface. The debug module provides a means to selectively trigger and capture bus information so an external development system can reconstruct what happened inside the MCU on a cycle-by-cycle basis without having external access to the address and data signals.

The alternate BDC clock source for MC9S08GBxxA/GTxxA is the ICGLCLK. See Chapter 7, “Internal Clock Generator (S08ICGV2),” for more information about ICGCLK and how to select clock sources.

15.1.1 Features

Features of the BDC module include:

- Single pin for mode selection and background communications
- BDC registers are not located in the memory map
- SYNC command to determine target communications rate
- Non-intrusive commands for memory access
- Active background mode commands for CPU register access
- GO and TRACE1 commands
- BACKGROUND command can wake CPU from stop or wait modes
- One hardware address breakpoint built into BDC
- Oscillator runs in stop mode, if BDC enabled
- COP watchdog disabled while in active background mode

Features of the ICE system include:

- Two trigger comparators: Two address + read/write (R/W) or one full address + data + R/W
- Flexible 8-word by 16-bit FIFO (first-in, first-out) buffer for capture information:
  - Change-of-flow addresses or
  - Event-only data
- Two types of breakpoints:
  - Tag breakpoints for instruction opcodes
  - Force breakpoints for any address access
- Nine trigger modes:
  - Basic: A-only, A OR B
  - Sequence: A then B
  - Full: A AND B data, A AND NOT B data
  - Event (store data): Event-only B, A then event-only B
  - Range: Inside range (A ≤ address ≤ B), outside range (address < A or address > B)

15.2 Background Debug Controller (BDC)

All MCUs in the HCS08 Family contain a single-wire background debug interface that supports in-circuit programming of on-chip nonvolatile memory and sophisticated non-intrusive debug capabilities. Unlike debug interfaces on earlier 8-bit MCUs, this system does not interfere with normal application resources. It does not use any user memory or locations in the memory map and does not share any on-chip peripherals.

BDC commands are divided into two groups:

- Active background mode commands require that the target MCU is in active background mode (the user program is not running). Active background mode commands allow the CPU registers to be read or written, and allow the user to trace one user instruction at a time, or GO to the user program from active background mode.

- Non-intrusive commands can be executed at any time even while the user's program is running. Non-intrusive commands allow a user to read or write MCU memory locations or access status and control registers within the background debug controller.

Typically, a relatively simple interface pod is used to translate commands from a host computer into commands for the custom serial interface to the single-wire background debug system. Depending on the development tool vendor, this interface pod may use a standard RS-232 serial port, a parallel printer port, or some other type of communications such as a universal serial bus (USB) to communicate between the host PC and the pod. The pod typically connects to the target system with ground, the BKGD pin, $\overline{\text{RESET}}$, and sometimes V_{DD}. An open-drain connection to reset allows the host to force a target system reset, which is useful to regain control of a lost target system or to control startup of a target system before the on-chip nonvolatile memory has been programmed. Sometimes V_{DD} can be used to allow the pod to use power from the target system to avoid the need for a separate power supply. However, if the pod is powered separately, it can be connected to a running target system without forcing a target system reset or otherwise disturbing the running application program.

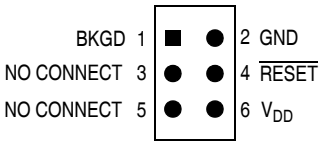

Figure 15-1. BDM Tool Connector

15.2.1 BKGD Pin Description

BKGD is the single-wire background debug interface pin. The primary function of this pin is for bidirectional serial communication of active background mode commands and data. During reset, this pin is used to select between starting in active background mode or starting the user's application program. This pin is also used to request a timed sync response pulse to allow a host development tool to determine the correct clock frequency for background debug serial communications.

BDC serial communications use a custom serial protocol first introduced on the M68HC12 Family of microcontrollers. This protocol assumes the host knows the communication clock rate that is determined by the target BDC clock rate. All communication is initiated and controlled by the host that drives a high-to-low edge to signal the beginning of each bit time. Commands and data are sent most significant bit first (MSB first). For a detailed description of the communications protocol, refer to Section 15.2.2, "Communication Details."

If a host is attempting to communicate with a target MCU that has an unknown BDC clock rate, a SYNC command may be sent to the target MCU to request a timed sync response signal from which the host can determine the correct communication speed.

BKGD is a pseudo-open-drain pin and there is an on-chip pullup so no external pullup resistor is required. Unlike typical open-drain pins, the external RC time constant on this pin, which is influenced by external capacitance, plays almost no role in signal rise time. The custom protocol provides for brief, actively driven speedup pulses to force rapid rise times on this pin without risking harmful drive level conflicts. Refer to Section 15.2.2, "Communication Details," for more detail.

When no debugger pod is connected to the 6-pin BDM interface connector, the internal pullup on BKGD chooses normal operating mode. When a debug pod is connected to BKGD it is possible to force the MCU into active background mode after reset. The specific conditions for forcing active background depend upon the HCS08 derivative (refer to the introduction to this Development Support section). It is not necessary to reset the target MCU to communicate with it through the background debug interface.

15.2.2 Communication Details

The BDC serial interface requires the external controller to generate a falling edge on the BKGD pin to indicate the start of each bit time. The external controller provides this falling edge whether data is transmitted or received.

BKGD is a pseudo-open-drain pin that can be driven either by an external controller or by the MCU. Data is transferred MSB first at 16 BDC clock cycles per bit (nominal speed). The interface times out if 512 BDC clock cycles occur between falling edges from the host. Any BDC command that was in progress when this timeout occurs is aborted without affecting the memory or operating mode of the target MCU system.

The custom serial protocol requires the debug pod to know the target BDC communication clock speed.

The clock switch (CLKSW) control bit in the BDC status and control register allows the user to select the BDC clock source. The BDC clock source can either be the bus or the alternate BDC clock source.

The BKGD pin can receive a high or low level or transmit a high or low level. The following diagrams show timing for each of these cases. Interface timing is synchronous to clocks in the target BDC, but asynchronous to the external host. The internal BDC clock signal is shown for reference in counting cycles.

Figure 15-2 shows an external host transmitting a logic 1 or 0 to the BKGD pin of a target HCS08 MCU. The host is asynchronous to the target so there is a 0-to-1 cycle delay from the host-generated falling edge to where the target perceives the beginning of the bit time. Ten target BDC clock cycles later, the target senses the bit level on the BKGD pin. Typically, the host actively drives the pseudo-open-drain BKGD pin during host-to-target transmissions to speed up rising edges. Because the target does not drive the BKGD pin during the host-to-target transmission period, there is no need to treat the line as an open-drain signal during this period.

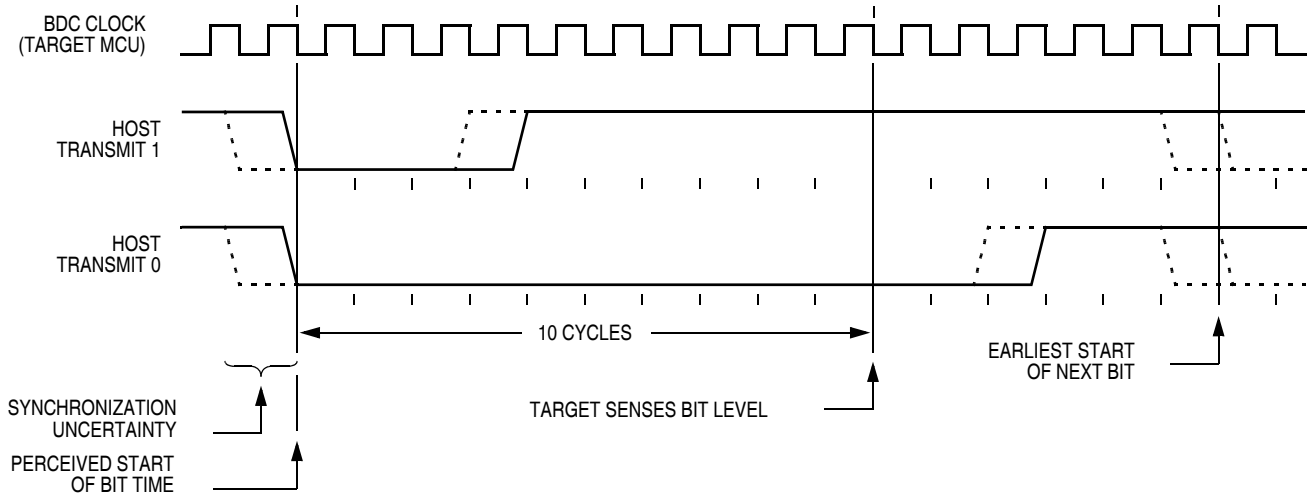

Figure 15-2. BDC Host-to-Target Serial Bit Timing

Figure 15-3 shows the host receiving a logic 1 from the target HCS08 MCU. Because the host is asynchronous to the target MCU, there is a 0-to-1 cycle delay from the host-generated falling edge on BKGD to the perceived start of the bit time in the target MCU. The host holds the BKGD pin low long enough for the target to recognize it (at least two target BDC cycles). The host must release the low drive before the target MCU drives a brief active-high speedup pulse seven cycles after the perceived start of the bit time. The host should sample the bit level about 10 cycles after it started the bit time.

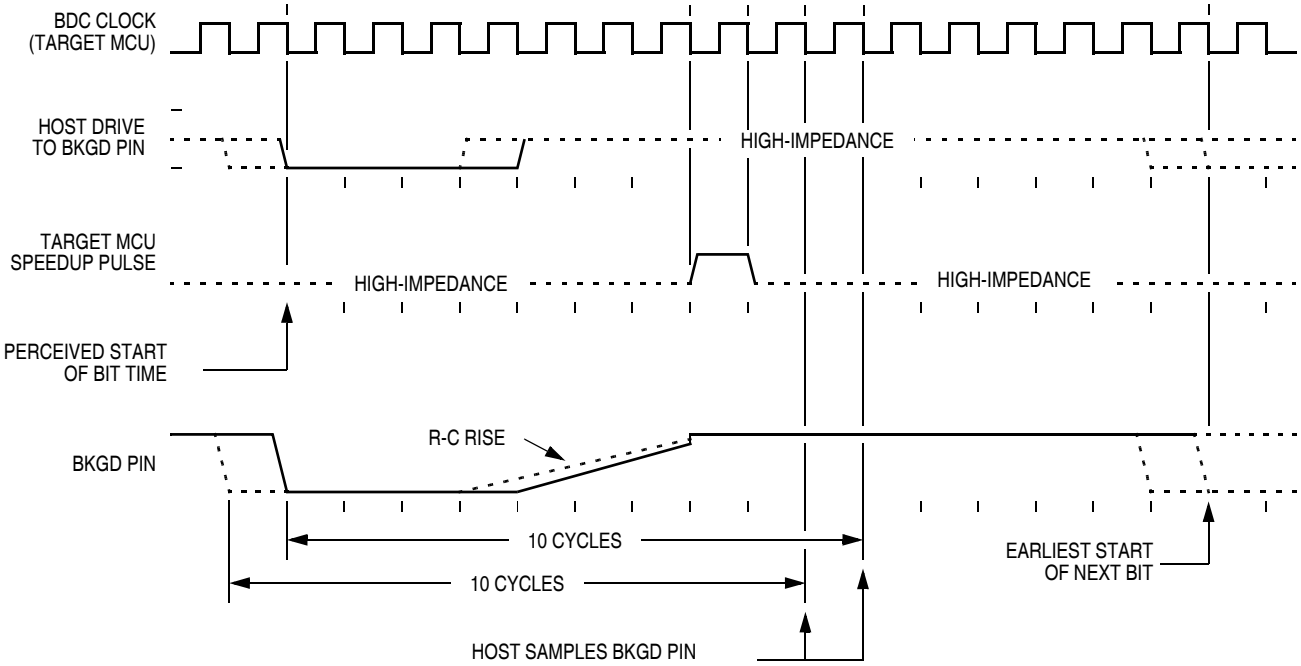

Figure 15-3. BDC Target-to-Host Serial Bit Timing (Logic 1)

Figure 15-4 shows the host receiving a logic 0 from the target HCS08 MCU. Because the host is asynchronous to the target MCU, there is a 0-to-1 cycle delay from the host-generated falling edge on BKGD to the start of the bit time as perceived by the target MCU. The host initiates the bit time but the target HCS08 finishes it. Because the target wants the host to receive a logic 0, it drives the BKGD pin low for 13 BDC clock cycles, then briefly drives it high to speed up the rising edge. The host samples the bit level about 10 cycles after starting the bit time.

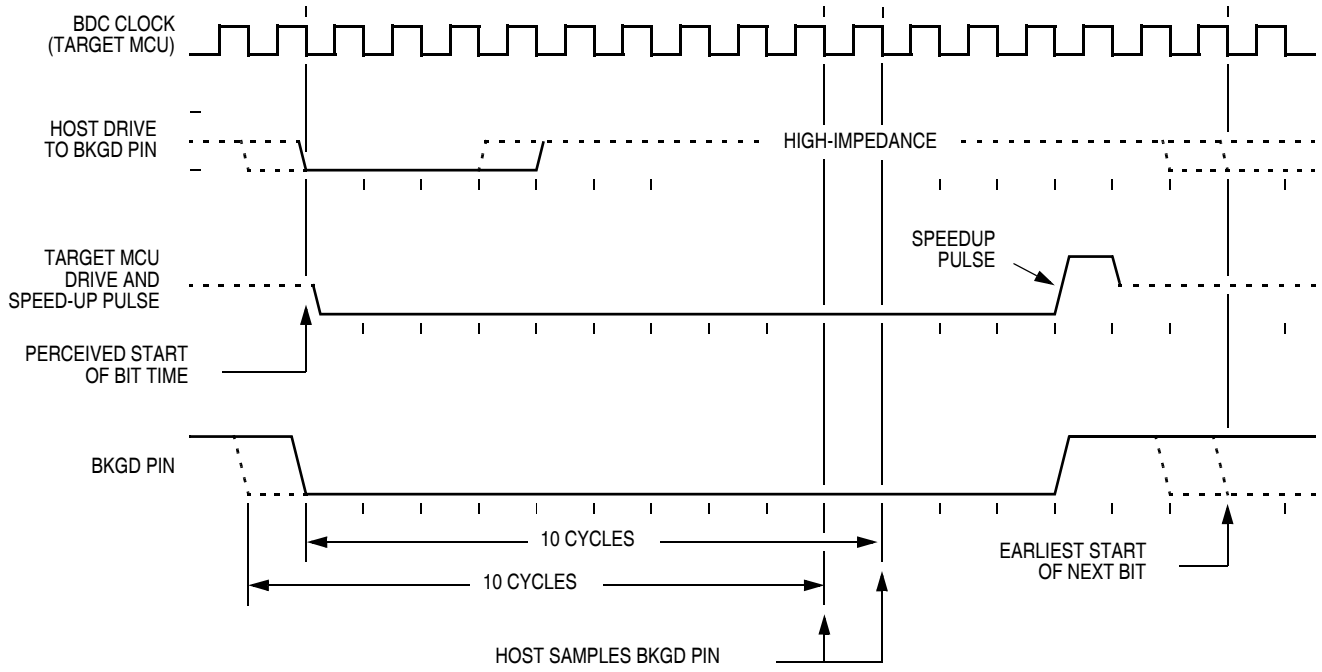

Figure 15-4. BDM Target-to-Host Serial Bit Timing (Logic 0)

15.2.3 BDC Commands

BDC commands are sent serially from a host computer to the BKGD pin of the target HCS08 MCU. All commands and data are sent MSB-first using a custom BDC communications protocol. Active background mode commands require that the target MCU is currently in the active background mode while non-intrusive commands may be issued at any time whether the target MCU is in active background mode or running a user application program.

Table 15-1 shows all HCS08 BDC commands, a shorthand description of their coding structure, and the meaning of each command.

Coding Structure Nomenclature

This nomenclature is used in Table 15-1 to describe the coding structure of the BDC commands.

		Commands begin with an 8-bit hexadecimal command code in the host-to-target direction (most significant bit first)
/	=	separates parts of the command
d	=	delay 16 target BDC clock cycles
AAAA	=	a 16-bit address in the host-to-target direction
RD	=	8 bits of read data in the target-to-host direction
WD	=	8 bits of write data in the host-to-target direction
RD16	=	16 bits of read data in the target-to-host direction
WD16	=	16 bits of write data in the host-to-target direction
SS	=	the contents of BDCSCR in the target-to-host direction (STATUS)
CC	=	8 bits of write data for BDCSCR in the host-to-target direction (CONTROL)
RBKP	=	16 bits of read data in the target-to-host direction (from BDCBKPT breakpoint register)
WBKP	=	16 bits of write data in the host-to-target direction (for BDCBKPT breakpoint register)

Table 15-1. BDC Command Summary

Command Mnemonic	Active BDM/ Non-intrusive	Coding Structure	Description
SYNC	Non-intrusive	n/a[1]	Request a timed reference pulse to determine target BDC communication speed
ACK_ENABLE	Non-intrusive	D5/d	Enable acknowledge protocol. Refer to Freescale document order no. HCS08RMv1/D.
ACK_DISABLE	Non-intrusive	D6/d	Disable acknowledge protocol. Refer to Freescale document order no. HCS08RMv1/D.
BACKGROUND	Non-intrusive	90/d	Enter active background mode if enabled (ignore if ENBDM bit equals 0)
READ_STATUS	Non-intrusive	E4/SS	Read BDC status from BDCSCR
WRITE_CONTROL	Non-intrusive	C4/CC	Write BDC controls in BDCSCR
READ_BYTE	Non-intrusive	E0/AAAA/d/RD	Read a byte from target memory
READ_BYTE_WS	Non-intrusive	E1/AAAA/d/SS/RD	Read a byte and report status
READ_LAST	Non-intrusive	E8/SS/RD	Re-read byte from address just read and report status
WRITE_BYTE	Non-intrusive	C0/AAAA/WD/d	Write a byte to target memory
WRITE_BYTE_WS	Non-intrusive	C1/AAAA/WD/d/SS	Write a byte and report status
READ_BKPT	Non-intrusive	E2/RBKP	Read BDCBKPT breakpoint register
WRITE_BKPT	Non-intrusive	C2/WBKP	Write BDCBKPT breakpoint register
GO	Active BDM	08/d	Go to execute the user application program starting at the address currently in the PC
TRACE1	Active BDM	10/d	Trace 1 user instruction at the address in the PC, then return to active background mode
TAGGO	Active BDM	18/d	Same as GO but enable external tagging (HCS08 devices have no external tagging pin)
READ_A	Active BDM	68/d/RD	Read accumulator (A)
READ_CCR	Active BDM	69/d/RD	Read condition code register (CCR)
READ_PC	Active BDM	6B/d/RD16	Read program counter (PC)
READ_HX	Active BDM	6C/d/RD16	Read H and X register pair (H:X)
READ_SP	Active BDM	6F/d/RD16	Read stack pointer (SP)
READ_NEXT	Active BDM	70/d/RD	Increment H:X by one then read memory byte located at H:X
READ_NEXT_WS	Active BDM	71/d/SS/RD	Increment H:X by one then read memory byte located at H:X. Report status and data.
WRITE_A	Active BDM	48/WD/d	Write accumulator (A)
WRITE_CCR	Active BDM	49/WD/d	Write condition code register (CCR)
WRITE_PC	Active BDM	4B/WD16/d	Write program counter (PC)
WRITE_HX	Active BDM	4C/WD16/d	Write H and X register pair (H:X)
WRITE_SP	Active BDM	4F/WD16/d	Write stack pointer (SP)
WRITE_NEXT	Active BDM	50/WD/d	Increment H:X by one, then write memory byte located at H:X
WRITE_NEXT_WS	Active BDM	51/WD/d/SS	Increment H:X by one, then write memory byte located at H:X. Also report status.

[1] The SYNC command is a special operation that does not have a command code.

The SYNC command is unlike other BDC commands because the host does not necessarily know the correct communications speed to use for BDC communications until after it has analyzed the response to the SYNC command.

To issue a SYNC command, the host:

- Drives the BKGD pin low for at least 128 cycles of the slowest possible BDC clock (The slowest clock is normally the reference oscillator/64 or the self-clocked rate/64.)
- Drives BKGD high for a brief speedup pulse to get a fast rise time (This speedup pulse is typically one cycle of the fastest clock in the system.)
- Removes all drive to the BKGD pin so it reverts to high impedance
- Monitors the BKGD pin for the sync response pulse

The target, upon detecting the SYNC request from the host (which is a much longer low time than would ever occur during normal BDC communications):

- Waits for BKGD to return to a logic high
- Delays 16 cycles to allow the host to stop driving the high speedup pulse
- Drives BKGD low for 128 BDC clock cycles
- Drives a 1-cycle high speedup pulse to force a fast rise time on BKGD
- Removes all drive to the BKGD pin so it reverts to high impedance

The host measures the low time of this 128-cycle sync response pulse and determines the correct speed for subsequent BDC communications. Typically, the host can determine the correct communication speed within a few percent of the actual target speed and the communication protocol can easily tolerate speed errors of several percent.

15.2.4 BDC Hardware Breakpoint

The BDC includes one relatively simple hardware breakpoint that compares the CPU address bus to a 16-bit match value in the BDCBKPT register. This breakpoint can generate a forced breakpoint or a tagged breakpoint. A forced breakpoint causes the CPU to enter active background mode at the first instruction boundary following any access to the breakpoint address. The tagged breakpoint causes the instruction opcode at the breakpoint address to be tagged so that the CPU will enter active background mode rather than executing that instruction if and when it reaches the end of the instruction queue. This implies that tagged breakpoints can only be placed at the address of an instruction opcode while forced breakpoints can be set at any address.

The breakpoint enable (BKPTEN) control bit in the BDC status and control register (BDCSCR) is used to enable the breakpoint logic (BKPTEN = 1). When BKPTEN = 0, its default value after reset, the breakpoint logic is disabled and no BDC breakpoints are requested regardless of the values in other BDC breakpoint registers and control bits. The force/tag select (FTS) control bit in BDCSCR is used to select forced (FTS = 1) or tagged (FTS = 0) type breakpoints.

The on-chip debug module (DBG) includes circuitry for two additional hardware breakpoints that are more flexible than the simple breakpoint in the BDC module.

15.3 On-Chip Debug System (DBG)

Because HCS08 devices do not have external address and data buses, the most important functions of an in-circuit emulator have been built onto the chip with the MCU. The debug system consists of an 8-stage FIFO that can store address or data bus information, and a flexible trigger system to decide when to capture bus information and what information to capture. The system relies on the single-wire background debug system to access debug control registers and to read results out of the eight stage FIFO.

The debug module includes control and status registers that are accessible in the user's memory map. These registers are located in the high register space to avoid using valuable direct page memory space.

Most of the debug module's functions are used during development, and user programs rarely access any of the control and status registers for the debug module. The one exception is that the debug system can provide the means to implement a form of ROM patching. This topic is discussed in greater detail in Section 15.3.6, "Hardware Breakpoints."

15.3.1 Comparators A and B

Two 16-bit comparators (A and B) can optionally be qualified with the R/W signal and an opcode tracking circuit. Separate control bits allow you to ignore R/W for each comparator. The opcode tracking circuitry optionally allows you to specify that a trigger will occur only if the opcode at the specified address is actually executed as opposed to only being read from memory into the instruction queue. The comparators are also capable of magnitude comparisons to support the inside range and outside range trigger modes. Comparators are disabled temporarily during all BDC accesses.

The A comparator is always associated with the 16-bit CPU address. The B comparator compares to the CPU address or the 8-bit CPU data bus, depending on the trigger mode selected. Because the CPU data bus is separated into a read data bus and a write data bus, the RWAEN and RWA control bits have an additional purpose, in full address plus data comparisons they are used to decide which of these buses to use in the comparator B data bus comparisons. If RWAEN = 1 (enabled) and RWA = 0 (write), the CPU's write data bus is used. Otherwise, the CPU's read data bus is used.

The currently selected trigger mode determines what the debugger logic does when a comparator detects a qualified match condition. A match can cause:

- Generation of a breakpoint to the CPU
- Storage of data bus values into the FIFO
- Starting to store change-of-flow addresses into the FIFO (begin type trace)
- Stopping the storage of change-of-flow addresses into the FIFO (end type trace)

15.3.2 Bus Capture Information and FIFO Operation

The usual way to use the FIFO is to setup the trigger mode and other control options, then arm the debugger. When the FIFO has filled or the debugger has stopped storing data into the FIFO, you would read the information out of it in the order it was stored into the FIFO. Status bits indicate the number of words of valid information that are in the FIFO as data is stored into it. If a trace run is manually halted by writing 0 to ARM before the FIFO is full (CNT = 1:0:0:0), the information is shifted by one position and

the host must perform ((8 – CNT) – 1) dummy reads of the FIFO to advance it to the first significant entry in the FIFO.

In most trigger modes, the information stored in the FIFO consists of 16-bit change-of-flow addresses. In these cases, read DBGFH then DBGFL to get one coherent word of information out of the FIFO. Reading DBGFL (the low-order byte of the FIFO data port) causes the FIFO to shift so the next word of information is available at the FIFO data port. In the event-only trigger modes (see Section 15.3.5, "Trigger Modes"), 8-bit data information is stored into the FIFO. In these cases, the high-order half of the FIFO (DBGFH) is not used and data is read out of the FIFO by simply reading DBGFL. Each time DBGFL is read, the FIFO is shifted so the next data value is available through the FIFO data port at DBGFL.

In trigger modes where the FIFO is storing change-of-flow addresses, there is a delay between CPU addresses and the input side of the FIFO. Because of this delay, if the trigger event itself is a change-of-flow address or a change-of-flow address appears during the next two bus cycles after a trigger event starts the FIFO, it will not be saved into the FIFO. In the case of an end-trace, if the trigger event is a change-of-flow, it will be saved as the last change-of-flow entry for that debug run.

The FIFO can also be used to generate a profile of executed instruction addresses when the debugger is not armed. When ARM = 0, reading DBGFL causes the address of the most-recently fetched opcode to be saved in the FIFO. To use the profiling feature, a host debugger would read addresses out of the FIFO by reading DBGFH then DBGFL at regular periodic intervals. The first eight values would be discarded because they correspond to the eight DBGFL reads needed to initially fill the FIFO. Additional periodic reads of DBGFH and DBGFL return delayed information about executed instructions so the host debugger can develop a profile of executed instruction addresses.

15.3.3 Change-of-Flow Information

To minimize the amount of information stored in the FIFO, only information related to instructions that cause a change to the normal sequential execution of instructions is stored. With knowledge of the source and object code program stored in the target system, an external debugger system can reconstruct the path of execution through many instructions from the change-of-flow information stored in the FIFO.

For conditional branch instructions where the branch is taken (branch condition was true), the source address is stored (the address of the conditional branch opcode). Because BRA and BRN instructions are not conditional, these events do not cause change-of-flow information to be stored in the FIFO.

Indirect JMP and JSR instructions use the current contents of the H:X index register pair to determine the destination address, so the debug system stores the run-time destination address for any indirect JMP or JSR. For interrupts, RTI, or RTS, the destination address is stored in the FIFO as change-of-flow information.

15.3.4 Tag vs. Force Breakpoints and Triggers

Tagging is a term that refers to identifying an instruction opcode as it is fetched into the instruction queue, but not taking any other action until and unless that instruction is actually executed by the CPU. This distinction is important because any change-of-flow from a jump, branch, subroutine call, or interrupt causes some instructions that have been fetched into the instruction queue to be thrown away without being executed.

A force-type breakpoint waits for the current instruction to finish and then acts upon the breakpoint request. The usual action in response to a breakpoint is to go to active background mode rather than continuing to the next instruction in the user application program.

The tag vs. force terminology is used in two contexts within the debug module. The first context refers to breakpoint requests from the debug module to the CPU. The second refers to match signals from the comparators to the debugger control logic. When a tag-type break request is sent to the CPU, a signal is entered into the instruction queue along with the opcode so that if/when this opcode ever executes, the CPU will effectively replace the tagged opcode with a BGND opcode so the CPU goes to active background mode rather than executing the tagged instruction. When the TRGSEL control bit in the DBGT register is set to select tag-type operation, the output from comparator A or B is qualified by a block of logic in the debug module that tracks opcodes and only produces a trigger to the debugger if the opcode at the compare address is actually executed. There is separate opcode tracking logic for each comparator so more than one compare event can be tracked through the instruction queue at a time.

15.3.5 Trigger Modes

The trigger mode controls the overall behavior of a debug run. The 4-bit TRG field in the DBGT register selects one of nine trigger modes. When TRGSEL = 1 in the DBGT register, the output of the comparator must propagate through an opcode tracking circuit before triggering FIFO actions. The BEGIN bit in DBGT chooses whether the FIFO begins storing data when the qualified trigger is detected (begin trace), or the FIFO stores data in a circular fashion from the time it is armed until the qualified trigger is detected (end trigger).

A debug run is started by writing a 1 to the ARM bit in the DBGC register, which sets the ARMF flag and clears the AF and BF flags and the CNT bits in DBGS. A begin-trace debug run ends when the FIFO gets full. An end-trace run ends when the selected trigger event occurs. Any debug run can be stopped manually by writing a 0 to ARM or DBGEN in DBGC.

In all trigger modes except event-only modes, the FIFO stores change-of-flow addresses. In event-only trigger modes, the FIFO stores data in the low-order eight bits of the FIFO.

The BEGIN control bit is ignored in event-only trigger modes and all such debug runs are begin type traces. When TRGSEL = 1 to select opcode fetch triggers, it is not necessary to use R/W in comparisons because opcode tags would only apply to opcode fetches that are always read cycles. It would also be unusual to specify TRGSEL = 1 while using a full mode trigger because the opcode value is normally known at a particular address.

The following trigger mode descriptions only state the primary comparator conditions that lead to a trigger. Either comparator can usually be further qualified with R/W by setting RWAEN (RWBEN) and the corresponding RWA (RWB) value to be matched against R/W. The signal from the comparator with optional R/W qualification is used to request a CPU breakpoint if BRKEN = 1 and TAG determines whether the CPU request will be a tag request or a force request.

A-Only — Trigger when the address matches the value in comparator A

A OR B — Trigger when the address matches either the value in comparator A or the value in comparator B

A Then B — Trigger when the address matches the value in comparator B but only after the address for another cycle matched the value in comparator A. There can be any number of cycles after the A match and before the B match.

A AND B Data (Full Mode) — This is called a full mode because address, data, and R/W (optionally) must match within the same bus cycle to cause a trigger event. Comparator A checks address, the low byte of comparator B checks data, and R/W is checked against RWA if RWAEN = 1. The high-order half of comparator B is not used.

In full trigger modes it is not useful to specify a tag-type CPU breakpoint (BRKEN = TAG = 1), but if you do, the comparator B data match is ignored for the purpose of issuing the tag request to the CPU and the CPU breakpoint is issued when the comparator A address matches.

A AND NOT B Data (Full Mode) — Address must match comparator A, data must not match the low half of comparator B, and R/W must match RWA if RWAEN = 1. All three conditions must be met within the same bus cycle to cause a trigger.

In full trigger modes it is not useful to specify a tag-type CPU breakpoint (BRKEN = TAG = 1), but if you do, the comparator B data match is ignored for the purpose of issuing the tag request to the CPU and the CPU breakpoint is issued when the comparator A address matches.

Event-Only B (Store Data) — Trigger events occur each time the address matches the value in comparator B. Trigger events cause the data to be captured into the FIFO. The debug run ends when the FIFO becomes full.

A Then Event-Only B (Store Data) — After the address has matched the value in comparator A, a trigger event occurs each time the address matches the value in comparator B. Trigger events cause the data to be captured into the FIFO. The debug run ends when the FIFO becomes full.

Inside Range (A ≤ Address ≤ B) — A trigger occurs when the address is greater than or equal to the value in comparator A and less than or equal to the value in comparator B at the same time.

Outside Range (Address < A or Address > B) — A trigger occurs when the address is either less than the value in comparator A or greater than the value in comparator B.

15.3.6 Hardware Breakpoints

The BRKEN control bit in the DBGC register may be set to 1 to allow any of the trigger conditions described in Section 15.3.5, “Trigger Modes,” to be used to generate a hardware breakpoint request to the CPU. TAG in DBGC controls whether the breakpoint request will be treated as a tag-type breakpoint or a force-type breakpoint. A tag breakpoint causes the current opcode to be marked as it enters the instruction queue. If a tagged opcode reaches the end of the pipe, the CPU executes a BGND instruction to go to active background mode rather than executing the tagged opcode. A force-type breakpoint causes the CPU to finish the current instruction and then go to active background mode.

If the background mode has not been enabled (ENBDM = 1) by a serial WRITE_CONTROL command through the BKGD pin, the CPU will execute an SWI instruction instead of going to active background mode.

15.4 Register Definition

This section contains the descriptions of the BDC and DBG registers and control bits.

Refer to the high-page register summary in the device overview chapter of this data sheet for the absolute address assignments for all DBG registers. This section refers to registers and control bits only by their names. A Freescale-provided equate or header file is used to translate these names into the appropriate absolute addresses.

15.4.1 BDC Registers and Control Bits

The BDC has two registers:

- The BDC status and control register (BDCSCR) is an 8-bit register containing control and status bits for the background debug controller.
- The BDC breakpoint match register (BDCBKPT) holds a 16-bit breakpoint match address.

These registers are accessed with dedicated serial BDC commands and are not located in the memory space of the target MCU (so they do not have addresses and cannot be accessed by user programs).

Some of the bits in the BDCSCR have write limitations; otherwise, these registers may be read or written at any time. For example, the ENBDM control bit may not be written while the MCU is in active background mode. (This prevents the ambiguous condition of the control bit forbidding active background mode while the MCU is already in active background mode.) Also, the four status bits (BDMACT, WS, WSF, and DVF) are read-only status indicators and can never be written by the WRITE_CONTROL serial BDC command. The clock switch (CLKSW) control bit may be read or written at any time.

15.4.1.1 BDC Status and Control Register (BDCSCR)

This register can be read or written by serial BDC commands (READ_STATUS and WRITE_CONTROL) but is not accessible to user programs because it is not located in the normal memory map of the MCU.

	7	6	5	4	3	2	1	0
R	ENBDM	BDMACT	BKPTEN	FTS	CLKSW	WS	WSF	DVF
W								
Normal Reset	0	0	0	0	0	0	0	0
Reset in Active BDM:	1	1	0	0	1	0	0	0

= Unimplemented or Reserved

Figure 15-5. BDC Status and Control Register (BDCSCR)

Table 15-2. BDCSCR Register Field Descriptions

Field	Description
7 ENBDM	**Enable BDM (Permit Active Background Mode)** — Typically, this bit is written to 1 by the debug host shortly after the beginning of a debug session or whenever the debug host resets the target and remains 1 until a normal reset clears it. 0 BDM cannot be made active (non-intrusive commands still allowed) 1 BDM can be made active to allow active background mode commands
6 BDMACT	**Background Mode Active Status** — This is a read-only status bit. 0 BDM not active (user application program running) 1 BDM active and waiting for serial commands
5 BKPTEN	**BDC Breakpoint Enable** — If this bit is clear, the BDC breakpoint is disabled and the FTS (force tag select) control bit and BDCBKPT match register are ignored. 0 BDC breakpoint disabled 1 BDC breakpoint enabled
4 FTS	**Force/Tag Select** — When FTS = 1, a breakpoint is requested whenever the CPU address bus matches the BDCBKPT match register. When FTS = 0, a match between the CPU address bus and the BDCBKPT register causes the fetched opcode to be tagged. If this tagged opcode ever reaches the end of the instruction queue, the CPU enters active background mode rather than executing the tagged opcode. 0 Tag opcode at breakpoint address and enter active background mode if CPU attempts to execute that instruction 1 Breakpoint match forces active background mode at next instruction boundary (address need not be an opcode)
3 CLKSW	**Select Source for BDC Communications Clock** — CLKSW defaults to 0, which selects the alternate BDC clock source. 0 Alternate BDC clock source 1 MCU bus clock

Table 15-2. BDCSCR Register Field Descriptions (continued)

Field	Description
2 WS	**Wait or Stop Status** — When the target CPU is in wait or stop mode, most BDC commands cannot function. However, the BACKGROUND command can be used to force the target CPU out of wait or stop and into active background mode where all BDC commands work. Whenever the host forces the target MCU into active background mode, the host should issue a READ_STATUS command to check that BDMACT = 1 before attempting other BDC commands. 0 Target CPU is running user application code or in active background mode (was not in wait or stop mode when background became active) 1 Target CPU is in wait or stop mode, or a BACKGROUND command was used to change from wait or stop to active background mode
1 WSF	**Wait or Stop Failure Status** — This status bit is set if a memory access command failed due to the target CPU executing a wait or stop instruction at or about the same time. The usual recovery strategy is to issue a BACKGROUND command to get out of wait or stop mode into active background mode, repeat the command that failed, then return to the user program. (Typically, the host would restore CPU registers and stack values and re-execute the wait or stop instruction.) 0 Memory access did not conflict with a wait or stop instruction 1 Memory access command failed because the CPU entered wait or stop mode
0 DVF	**Data Valid Failure Status** — This status bit is not used in the MC9S08GBxxA/GTxxA because it does not have any slow access memory. 0 Memory access did not conflict with a slow memory access 1 Memory access command failed because CPU was not finished with a slow memory access

15.4.1.2 BDC Breakpoint Match Register (BDCBKPT)

This 16-bit register holds the address for the hardware breakpoint in the BDC. The BKPTEN and FTS control bits in BDCSCR are used to enable and configure the breakpoint logic. Dedicated serial BDC commands (READ_BKPT and WRITE_BKPT) are used to read and write the BDCBKPT register but is not accessible to user programs because it is not located in the normal memory map of the MCU. Breakpoints are normally set while the target MCU is in active background mode before running the user application program. For additional information about setup and use of the hardware breakpoint logic in the BDC, refer to Section 15.2.4, “BDC Hardware Breakpoint.”

15.4.2 System Background Debug Force Reset Register (SBDFR)

This register contains a single write-only control bit. A serial background mode command such as WRITE_BYTE must be used to write to SBDFR. Attempts to write this register from a user program are ignored. Reads always return 0x00.

	7	6	5	4	3	2	1	0
R	0	0	0	0	0	0	0	0
W								BDFR[1]
Reset	0	0	0	0	0	0	0	0

= Unimplemented or Reserved

[1] BDFR is writable only through serial background mode debug commands, not from user programs.

Figure 15-6. System Background Debug Force Reset Register (SBDFR)

Table 15-3. SBDFR Register Field Description

Field	Description
0 BDFR	**Background Debug Force Reset** — A serial active background mode command such as WRITE_BYTE allows an external debug host to force a target system reset. Writing 1 to this bit forces an MCU reset. This bit cannot be written from a user program.

15.4.3 DBG Registers and Control Bits

The debug module includes nine bytes of register space for three 16-bit registers and three 8-bit control and status registers. These registers are located in the high register space of the normal memory map so they are accessible to normal application programs. These registers are rarely if ever accessed by normal user application programs with the possible exception of a ROM patching mechanism that uses the breakpoint logic.

15.4.3.1 Debug Comparator A High Register (DBGCAH)

This register contains compare value bits for the high-order eight bits of comparator A. This register is forced to 0x00 at reset and can be read at any time or written at any time unless ARM = 1.

15.4.3.2 Debug Comparator A Low Register (DBGCAL)

This register contains compare value bits for the low-order eight bits of comparator A. This register is forced to 0x00 at reset and can be read at any time or written at any time unless ARM = 1.

15.4.3.3 Debug Comparator B High Register (DBGCBH)

This register contains compare value bits for the high-order eight bits of comparator B. This register is forced to 0x00 at reset and can be read at any time or written at any time unless ARM = 1.

15.4.3.4 Debug Comparator B Low Register (DBGCBL)

This register contains compare value bits for the low-order eight bits of comparator B. This register is forced to 0x00 at reset and can be read at any time or written at any time unless ARM = 1.

15.4.3.5 Debug FIFO High Register (DBGFH)

This register provides read-only access to the high-order eight bits of the FIFO. Writes to this register have no meaning or effect. In the event-only trigger modes, the FIFO only stores data into the low-order byte of each FIFO word, so this register is not used and will read 0x00.

Reading DBGFH does not cause the FIFO to shift to the next word. When reading 16-bit words out of the FIFO, read DBGFH before reading DBGFL because reading DBGFL causes the FIFO to advance to the next word of information.

15.4.3.6 Debug FIFO Low Register (DBGFL)

This register provides read-only access to the low-order eight bits of the FIFO. Writes to this register have no meaning or effect.

Reading DBGFL causes the FIFO to shift to the next available word of information. When the debug module is operating in event-only modes, only 8-bit data is stored into the FIFO (high-order half of each FIFO word is unused). When reading 8-bit words out of the FIFO, simply read DBGFL repeatedly to get successive bytes of data from the FIFO. It isn't necessary to read DBGFH in this case.

Do not attempt to read data from the FIFO while it is still armed (after arming but before the FIFO is filled or ARMF is cleared) because the FIFO is prevented from advancing during reads of DBGFL. This can interfere with normal sequencing of reads from the FIFO.

Reading DBGFL while the debugger is not armed causes the address of the most-recently fetched opcode to be stored to the last location in the FIFO. By reading DBGFH then DBGFL periodically, external host software can develop a profile of program execution. After eight reads from the FIFO, the ninth read will return the information that was stored as a result of the first read. To use the profiling feature, read the FIFO eight times without using the data to prime the sequence and then begin using the data to get a delayed picture of what addresses were being executed. The information stored into the FIFO on reads of DBGFL (while the FIFO is not armed) is the address of the most-recently fetched opcode.

15.4.3.7 Debug Control Register (DBGC)

This register can be read or written at any time.

	7	6	5	4	3	2	1	0
R W	DBGEN	ARM	TAG	BRKEN	RWA	RWAEN	RWB	RWBEN
Reset	0	0	0	0	0	0	0	0

Figure 15-7. Debug Control Register (DBGC)

Table 15-4. DBGC Register Field Descriptions

Field	Description
7 DBGEN	**Debug Module Enable** — Used to enable the debug module. DBGEN cannot be set to 1 if the MCU is secure. 0 DBG disabled 1 DBG enabled
6 ARM	**Arm Control** — Controls whether the debugger is comparing and storing information in the FIFO. A write is used to set this bit (and ARMF) and completion of a debug run automatically clears it. Any debug run can be manually stopped by writing 0 to ARM or to DBGEN. 0 Debugger not armed 1 Debugger armed
5 TAG	**Tag/Force Select** — Controls whether break requests to the CPU will be tag or force type requests. If BRKEN = 0, this bit has no meaning or effect. 0 CPU breaks requested as force type requests 1 CPU breaks requested as tag type requests
4 BRKEN	**Break Enable** — Controls whether a trigger event will generate a break request to the CPU. Trigger events can cause information to be stored in the FIFO without generating a break request to the CPU. For an end trace, CPU break requests are issued to the CPU when the comparator(s) and R/W meet the trigger requirements. For a begin trace, CPU break requests are issued when the FIFO becomes full. TRGSEL does not affect the timing of CPU break requests. 0 CPU break requests not enabled 1 Triggers cause a break request to the CPU
3 RWA	**R/W Comparison Value for Comparator A** — When RWAEN = 1, this bit determines whether a read or a write access qualifies comparator A. When RWAEN = 0, RWA and the R/W signal do not affect comparator A. 0 Comparator A can only match on a write cycle 1 Comparator A can only match on a read cycle
2 RWAEN	**Enable R/W for Comparator A** — Controls whether the level of R/W is considered for a comparator A match. 0 R/W is not used in comparison A 1 R/W is used in comparison A
1 RWB	**R/W Comparison Value for Comparator B** — When RWBEN = 1, this bit determines whether a read or a write access qualifies comparator B. When RWBEN = 0, RWB and the R/W signal do not affect comparator B. 0 Comparator B can match only on a write cycle 1 Comparator B can match only on a read cycle
0 RWBEN	**Enable R/W for Comparator B** — Controls whether the level of R/W is considered for a comparator B match. 0 R/W is not used in comparison B 1 R/W is used in comparison B

15.4.3.8 Debug Trigger Register (DBGT)

This register can be read any time, but may be written only if ARM = 0, except bits 4 and 5 are hard-wired to 0s.

	7	6	5	4	3	2	1	0
R	TRGSEL	BEGIN	0	0	TRG3	TRG2	TRG1	TRG0
W								
Reset	0	0	0	0	0	0	0	0

= Unimplemented or Reserved

Figure 15-8. Debug Trigger Register (DBGT)

Table 15-5. DBGT Register Field Descriptions

Field	Description
7 TRGSEL	**Trigger Type** — Controls whether the match outputs from comparators A and B are qualified with the opcode tracking logic in the debug module. If TRGSEL is set, a match signal from comparator A or B must propagate through the opcode tracking logic and a trigger event is only signalled to the FIFO logic if the opcode at the match address is actually executed. 0 Trigger on access to compare address (force) 1 Trigger if opcode at compare address is executed (tag)
6 BEGIN	**Begin/End Trigger Select** — Controls whether the FIFO starts filling at a trigger or fills in a circular manner until a trigger ends the capture of information. In event-only trigger modes, this bit is ignored and all debug runs are assumed to be begin traces. 0 Data stored in FIFO until trigger (end trace) 1 Trigger initiates data storage (begin trace)
3:0 TRG[3:0]	**Select Trigger Mode** — Selects one of nine triggering modes, as described below. 0000 A-only 0001 A OR B 0010 A Then B 0011 Event-only B (store data) 0100 A then event-only B (store data) 0101 A AND B data (full mode) 0110 A AND NOT B data (full mode) 0111 Inside range: A ≤ address ≤ B 1000 Outside range: address < A or address > B 1001 – 1111 (No trigger)

15.4.3.9 Debug Status Register (DBGS)

This is a read-only status register.

	7	6	5	4	3	2	1	0
R	AF	BF	ARMF	0	CNT3	CNT2	CNT1	CNT0
W								
Reset	0	0	0	0	0	0	0	0

= Unimplemented or Reserved

Figure 15-9. Debug Status Register (DBGS)

Table 15-6. DBGS Register Field Descriptions

Field	Description
7 AF	**Trigger Match A Flag** — AF is cleared at the start of a debug run and indicates whether a trigger match A condition was met since arming. 0 Comparator A has not matched 1 Comparator A match
6 BF	**Trigger Match B Flag** — BF is cleared at the start of a debug run and indicates whether a trigger match B condition was met since arming. 0 Comparator B has not matched 1 Comparator B match
5 ARMF	**Arm Flag** — While DBGEN = 1, this status bit is a read-only image of ARM in DBGC. This bit is set by writing 1 to the ARM control bit in DBGC (while DBGEN = 1) and is automatically cleared at the end of a debug run. A debug run is completed when the FIFO is full (begin trace) or when a trigger event is detected (end trace). A debug run can also be ended manually by writing 0 to ARM or DBGEN in DBGC. 0 Debugger not armed 1 Debugger armed
3:0 CNT[3:0]	**FIFO Valid Count** — These bits are cleared at the start of a debug run and indicate the number of words of valid data in the FIFO at the end of a debug run. The value in CNT does not decrement as data is read out of the FIFO. The external debug host is responsible for keeping track of the count as information is read out of the FIFO. 0000 Number of valid words in FIFO = No valid data 0001 Number of valid words in FIFO = 1 0010 Number of valid words in FIFO = 2 0011 Number of valid words in FIFO = 3 0100 Number of valid words in FIFO = 4 0101 Number of valid words in FIFO = 5 0110 Number of valid words in FIFO = 6 0111 Number of valid words in FIFO = 7 1000 Number of valid words in FIFO = 8

Appendix A
Electrical Characteristics

A.1 Introduction

This section contains electrical and timing specifications.

A.2 Absolute Maximum Ratings

Absolute maximum ratings are stress ratings only, and functional operation at the maxima is not guaranteed. Stress beyond the limits specified in Table A-1 may affect device reliability or cause permanent damage to the device. For functional operating conditions, refer to the remaining tables in this section.

This device contains circuitry protecting against damage due to high static voltage or electrical fields; however, it is advised that normal precautions be taken to avoid application of any voltages higher than maximum-rated voltages to this high-impedance circuit. Reliability of operation is enhanced if unused inputs are tied to an appropriate logic voltage level (for instance, either V_{SS} or V_{DD}) or the programmable pull-up resistor associated with the pin is enabled.

Table A-1. Absolute Maximum Ratings

Rating	Symbol	Value	Unit
Supply voltage	V_{DD}	–0.3 to +3.8	V
Maximum current into V_{DD}	I_{DD}	120	mA
Digital input voltage	V_{In}	–0.3 to V_{DD} + 0.3	V
Instantaneous maximum current Single pin limit (applies to all port pins)[1, 2, 3]	I_D	± 25	mA
Storage temperature range	T_{stg}	–55 to 150	°C

1 Input must be current limited to the value specified. To determine the value of the required current-limiting resistor, calculate resistance values for positive (V_{DD}) and negative (V_{SS}) clamp voltages, then use the larger of the two resistance values.

2 All functional non-supply pins are internally clamped to V_{SS} and V_{DD}.

3 Power supply must maintain regulation within operating V_{DD} range during instantaneous and operating maximum current conditions. If positive injection current ($V_{In} > V_{DD}$) is greater than I_{DD}, the injection current may flow out of V_{DD} and could result in external power supply going out of regulation. Ensure external V_{DD} load will shunt current greater than maximum injection current. This will be the greatest risk when the MCU is not consuming power. Examples are: if no system clock is present, or if the clock rate is very low which would reduce overall power consumption.

A.3 Thermal Characteristics

This section provides information about operating temperature range, power dissipation, and package thermal resistance. Power dissipation on I/O pins is usually small compared to the power dissipation in on-chip logic and voltage regulator circuits and it is user-determined rather than being controlled by the MCU design. In order to take $P_{I/O}$ into account in power calculations, determine the difference between actual pin voltage and V_{SS} or V_{DD} and multiply by the pin current for each I/O pin. Except in cases of unusually high pin current (heavy loads), the difference between pin voltage and V_{SS} or V_{DD} will be very small.

Table A-2. Thermal Characteristics

Rating	Symbol	Value	Unit	Temp. Code
Operating temperature range (packaged)	T_A	–40 to 85	°C	C
Thermal resistance 64-pin LQFP (GBxxA) 48-pin QFN (GTxxA) 44-pin QFP (GTxxA) 42-pin SDIP (GTxxA)	θ_{JA}[1,2]	 65 82 118 57	°C/W	—

[1] Junction temperature is a function of die size, on-chip power dissipation, package thermal resistance, mounting site (board) temperature, ambient temperature, airflow, power dissipation of other components on the board, and board thermal resistance.

[2] Per SEMI G38-87 and JEDEC JESD51-2 with the single layer board horizontal. Single layer board is designed per JEDEC JESD51-3.

The average chip-junction temperature (T_J) in °C can be obtained from:

$$T_J = T_A + (P_D \times \theta_{JA}) \qquad \textit{Eqn. A-1}$$

where:

T_A = Ambient temperature, °C
θ_{JA} = Package thermal resistance, junction-to-ambient, °C/W
$P_D = P_{int} + P_{I/O}$
$P_{int} = I_{DD} \times V_{DD}$, Watts — chip internal power
$P_{I/O}$ = Power dissipation on input and output pins — user determined

For most applications, $P_{I/O} << P_{int}$ and can be neglected. An approximate relationship between P_D and T_J (if $P_{I/O}$ is neglected) is:

$$P_D = K \div (T_J + 273°C) \qquad \textit{Eqn. A-2}$$

Solving equations 1 and 2 for K gives:

$$K = P_D \times (T_A + 273°C) + \theta_{JA} \times (P_D)^2 \qquad \textit{Eqn. A-3}$$

where K is a constant pertaining to the particular part. K can be determined from equation 3 by measuring P_D (at equilibrium) for a known T_A. Using this value of K, the values of P_D and T_J can be obtained by solving equations 1 and 2 iteratively for any value of T_A.

A.4 Electrostatic Discharge (ESD) Protection Characteristics

Although damage from static discharge is much less common on these devices than on early CMOS circuits, normal handling precautions should be used to avoid exposure to static discharge. Qualification tests are performed to ensure that these devices can withstand exposure to reasonable levels of static without suffering any permanent damage. All ESD testing is in conformity with CDF-AEC-Q00 Stress Test Qualification for Automotive Grade Integrated Circuits. (http://www.aecouncil.com/) This device was qualified to AEC-Q100 Rev E. A device is considered to have failed if, after exposure to ESD pulses, the device no longer meets the device specification requirements. Complete dc parametric and functional testing is performed per the applicable device specification at room temperature followed by hot temperature, unless specified otherwise in the device specification.

Table A-3. ESD Protection Characteristics

Parameter	Symbol	Value	Unit
ESD Target for Machine Model (MM) MM circuit description	V_{THMM}	200	V
ESD Target for Human Body Model (HBM) HBM circuit description	V_{THHBM}	2000	V

A.5 DC Characteristics

This section includes information about power supply requirements, I/O pin characteristics, and power supply current in various operating modes.

Table A-4. DC Characteristics (Sheet 1 of 3)
(Temperature Range = –40 to 85°C Ambient)

Parameter	Symbol	Min	Typical[1]	Max	Unit
Supply voltage (run, wait and stop modes.) $0 < f_{Bus} < 8$ MHz $0 < f_{Bus} < 20$ MHz	V_{DD}	1.8 2.08		3.6 3.6	V
Minimum RAM retention supply voltage applied to V_{DD}	V_{RAM}	1.0[2]		—	V
Low-voltage detection threshold — high range (V_{DD} falling) (V_{DD} rising)	V_{LVDH}	2.08 2.16	2.1 2.19	2.2 2.27	V
Low-voltage detection threshold — low range (V_{DD} falling) (V_{DD} rising)	V_{LVDL}	1.80 1.88	1.82 1.90	1.91 1.99	V
Low-voltage warning threshold — high range (V_{DD} falling) (V_{DD} rising)	V_{LVWH}	2.35 2.35	2.40 2.40	2.5 2.5	V

Table A-4. DC Characteristics (Sheet 2 of 3)
(Temperature Range = –40 to 85°C Ambient)

Parameter	Symbol	Min	Typical[1]	Max	Unit
Low-voltage warning threshold — low range (V_{DD} falling) (V_{DD} rising)	V_{LVWL}	2.08 2.16	2.1 2.19	2.2 2.27	V
Power on reset (POR) re-arm voltage[(2)] Mode = stop Mode = run and Wait	V_{Rearm}	0.20 0.50	0.30 0.80	0.40 1.2	V
Input high voltage (V_{DD} > 2.3 V) (all digital inputs)	V_{IH}	$0.70 \times V_{DD}$		—	V
Input high voltage (1.8 V ≤ V_{DD} ≤ 2.3 V) (all digital inputs)	V_{IH}	$0.85 \times V_{DD}$		—	V
Input low voltage (V_{DD} > 2.3 V) (all digital inputs)	V_{IL}	—		$0.35 \times V_{DD}$	V
Input low voltage (1.8 V ≤ V_{DD} ≤ 2.3 V) (all digital inputs)	V_{IL}	—		$0.30 \times V_{DD}$	V
Input hysteresis (all digital inputs)	V_{hys}	$0.06 \times V_{DD}$		—	V
Input leakage current (per pin) $V_{In} = V_{DD}$ or $V_{SS,}$ all input only pins	$\lvert I_{In} \rvert$	—	0.025	1.0	μA
High impedance (off-state) leakage current (per pin) $V_{In} = V_{DD}$ or V_{SS}, all input/output	$\lvert I_{OZ} \rvert$	—	0.025	1.0	μA
Internal pullup and pulldown resistors[3] (all port pins and IRQ)	R_{PU}	17.5		52.5	kΩ
Internal pulldown resistors (Port A4–A7 and IRQ)	R_{PD}	17.5		52.5	kΩ
Output high voltage (V_{DD} ≥ 1.8 V) I_{OH} = –2 mA (ports A, B, D, E, and G)	V_{OH}	V_{DD} – 0.5		—	V
Output high voltage (ports C and F) I_{OH} = –10 mA (V_{DD} ≥ 2.7 V) I_{OH} = –6 mA (V_{DD} ≥ 2.3 V) I_{OH} = –3 mA (V_{DD} ≥ 1.8 V)		V_{DD} – 0.5		— — —	
Maximum total I_{OH} for all port pins	$\lvert I_{OHT} \rvert$	—		60	mA
Output low voltage (V_{DD} ≥ 1.8 V) I_{OL} = 2.0 mA (ports A, B, D, E, and G)	V_{OL}	—		0.5	V
Output low voltage (ports C and F) I_{OL} = 10.0 mA (V_{DD} ≥ 2.7 V) I_{OL} = 6 mA (V_{DD} ≥ 2.3 V) I_{OL} = 3 mA (V_{DD} ≥ 1.8 V)		— — —		0.5 0.5 0.5	
Maximum total I_{OL} for all port pins	I_{OLT}	—		60	mA

Table A-4. DC Characteristics (Sheet 3 of 3)
(Temperature Range = –40 to 85°C Ambient)

Parameter	Symbol	Min	Typical[1]	Max	Unit
dc injection current[4, 5, 6, 7, 8] $V_{IN} < V_{SS}$, $V_{IN} > V_{DD}$ Single pin limit Total MCU limit, includes sum of all stressed pins	$\lvert I_{IC} \rvert$	 — —		 0.2 5	 mA mA
Input capacitance (all non-supply pins)[(2)]	C_{In}	—		7	pF

1 Typicals are measured at 25°C.

2 This parameter is characterized and not tested on each device.

3 Measurement condition for pull resistors: $V_{In} = V_{SS}$ for pullup and $V_{In} = V_{DD}$ for pulldown.

4 Power supply must maintain regulation within operating V_{DD} range during instantaneous and operating maximum current conditions. If positive injection current ($V_{In} > V_{DD}$) is greater than I_{DD}, the injection current may flow out of V_{DD} and could result in external power supply going out of regulation. Ensure external V_{DD} load will shunt current greater than maximum injection current. This will be the greatest risk when the MCU is not consuming power. Examples are: if no system clock is present, or if clock rate is very low which would reduce overall power consumption.

5 All functional non-supply pins are internally clamped to V_{SS} and V_{DD}.

6 Input must be current limited to the value specified. To determine the value of the required current-limiting resistor, calculate resistance values for positive and negative clamp voltages, then use the larger of the two values.

7 This parameter is characterized and not tested on each device.

8 IRQ does not have a clamp diode to V_{DD}. Do not drive IRQ above V_{DD}.

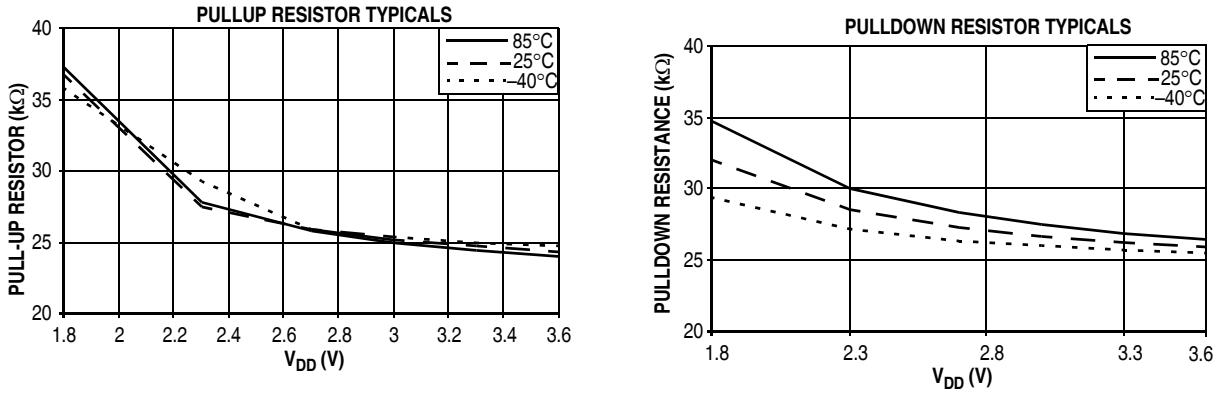

Figure A-1. Pullup and Pulldown Typical Resistor Values (V_{DD} = 3.0 V)

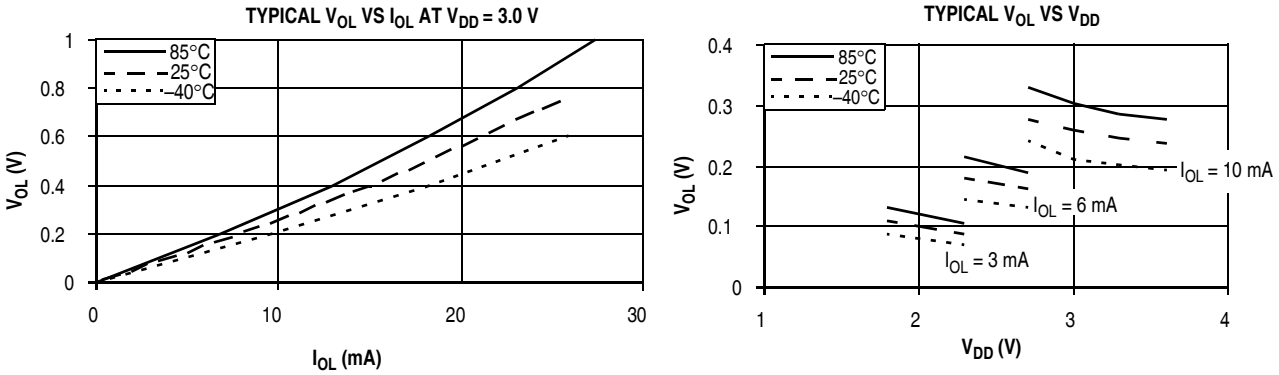

Figure A-2. Typical Low-Side Driver (Sink) Characteristics (Ports C and F)

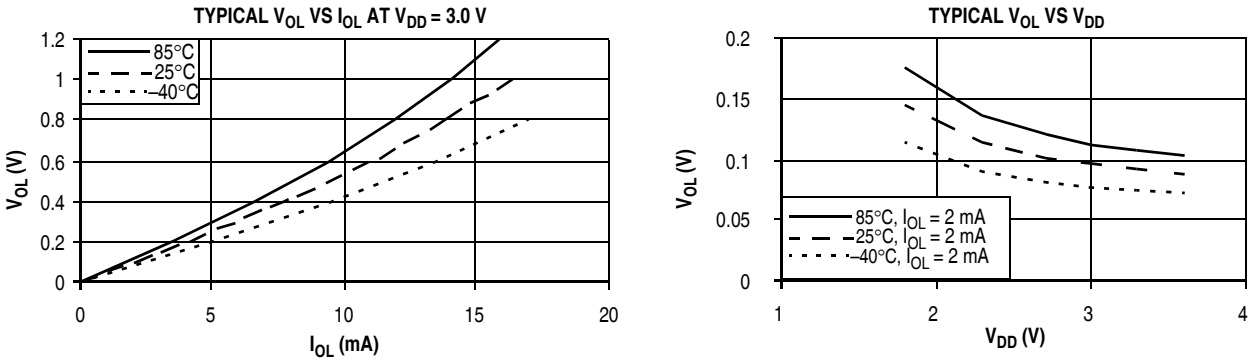

Figure A-3. Typical Low-Side Driver (Sink) Characteristics (Ports A, B, D, E, and G)

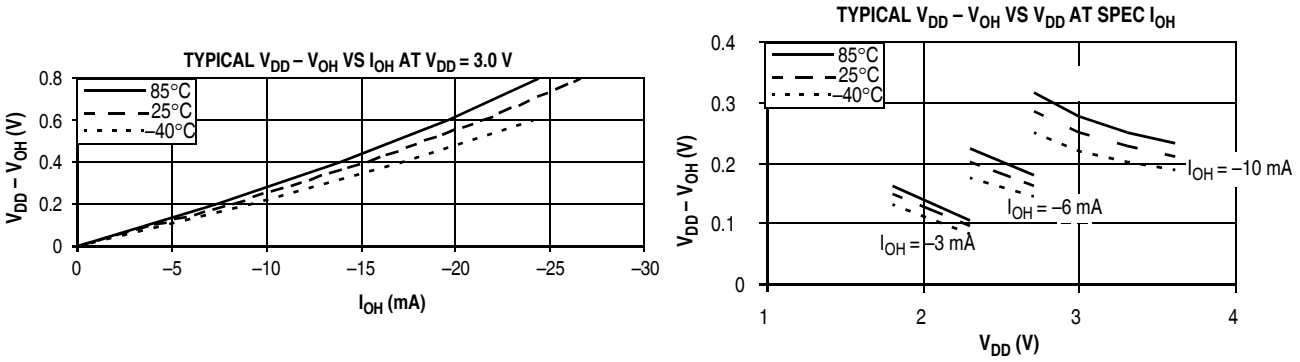

Figure A-4. Typical High-Side Driver (Source) Characteristics (Ports C and F)

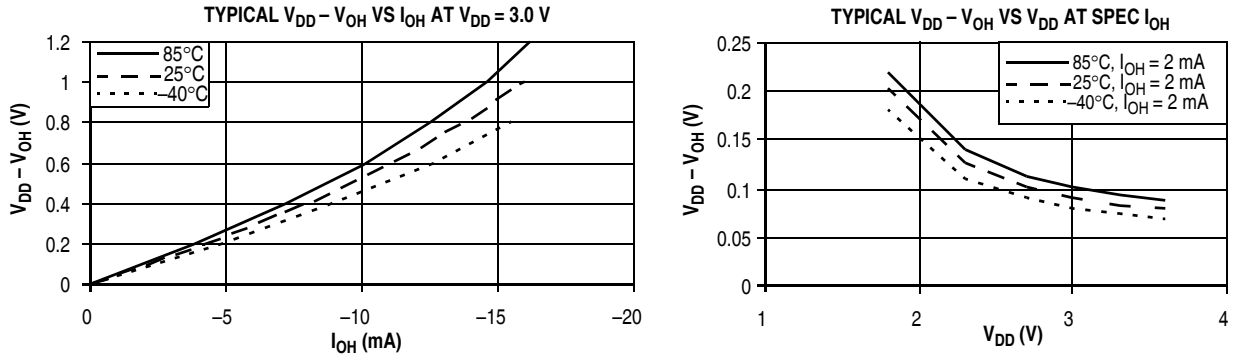

Figure A-5. Typical High-Side (Source) Characteristics (Ports A, B, D, E, and G)

A.6 Supply Current Characteristics

Table A-5. Supply Current Characteristics

Parameter	Symbol	V_{DD} (V)	Typical[1]	Max[2]	Temp. (°C)
Run supply current[3] measured at (CPU clock = 2 MHz, f_{Bus} = 1 MHz)	RI_{DD}	3	1.1 mA	2.1 mA[4] 2.1 mA(4) 2.1 mA(4)	55 70 85
		2	0.8 mA	1.8 mA(4) 1.8 mA(4) 1.8 mA(4)	55 70 85
Run supply current (3) measured at (CPU clock = 16 MHz, f_{Bus} = 8 MHz)	RI_{DD}	3	6.5 mA	7.5 mA(4) 7.5 mA(4) 7.5 mA[5]	55 70 85
		2	4.8 mA	5.8 mA(4) 5.8 mA(4) 5.8 mA(4)	55 70 85
Stop1 mode supply current	$S1I_{DD}$	3	25 nA	0.6 μA(4) 1.8 μA(4) 4.0 μA(5)	55 70 85
		2	20 nA	500 nA(4) 1.5 μA(4) 3.3 μA(4)	55 70 85
Stop2 mode supply current	$S2I_{DD}$	3	550 nA	3.0 μA(4) 5.5 μA(4) 11 μA(5)	55 70 85
		2	400 nA	2.4 μA(4) 5.0 μA(4) 9.5 μA(4)	55 70 85
Stop3 mode supply current	$S3I_{DD}$	3	675 nA	4.3 μA(4) 7.2 μA(4) 17.0 μA(5)	55 70 85
		2	500 nA	3.5 μA(4) 6.2 μA(4) 15.0 μA(4)	55 70 85
RTI adder to stop2 or stop3[6]		3	300 nA		55 70 85
		2	300 nA		55 70 85

Table A-5. Supply Current Characteristics (continued)

Parameter	Symbol	V_{DD} (V)	Typical[1]	Max[2]	Temp. (°C)
LVI adder to stop3 (LVDSE = LVDE = 1)		3	70 μA		55 70 85
		2	60 μA		55 70 85
Adder to stop3 for oscillator enabled[7] (OSCSTEN =1)		3	5 μA		55 70 85
		2	5 μA		55 70 85
Adder for loss-of-clock enabled		3	9 μA		55 70 85

1 Typicals are measured at 25°C. See Table A-6 through Table A-9 for typical curves across voltage/temperature.

2 Values given here are preliminary estimates prior to completing characterization.

3 All modules except ATD active, ICG configured for FBE, and does not include any dc loads on port pins

4 Values are characterized but not tested on every part.

5 Every unit tested to this parameter. All other values in the Max column are guaranteed by characterization.

6 Most customers are expected to find that auto-wakeup from stop2 or stop3 can be used instead of the higher current wait mode. Wait mode typical is 560 μA at 3 V and 422 μA at 2V with f_{Bus} = 1 MHz.

7 Values given under the following conditions: low range operation (RANGE = 0), low power mode (HGO = 0), clock monitor disabled (LOCD = 1).

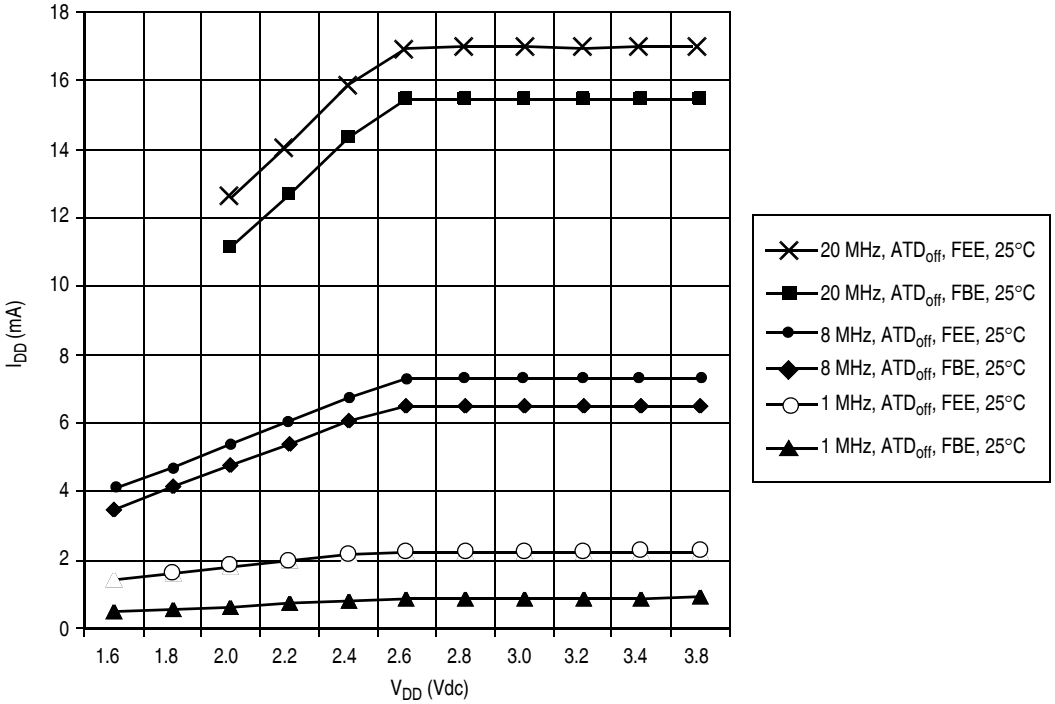

Figure A-6. Typical Run I_{DD} for FBE and FEE Modes, I_{DD} vs V_{DD}

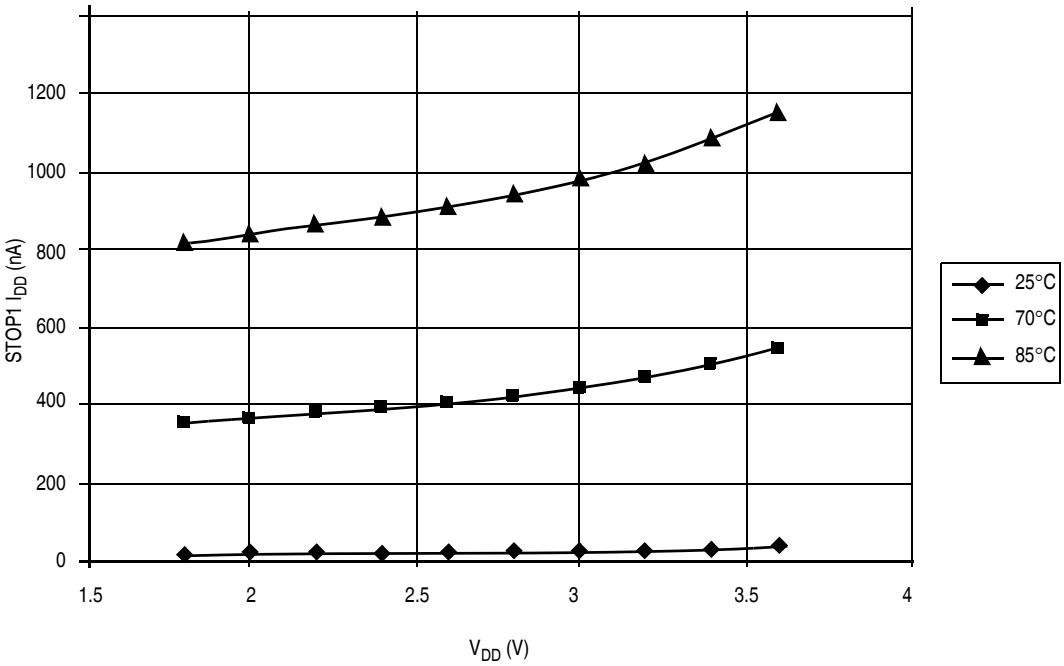

NOTES:
1. Clock sources and LVD are all disabled (OSCSTEN = LVDSE = 0).
2. All I/O are set as outputs and driven to V_{SS} with no load.

Figure A-7. Typical Stop1 I_{DD}

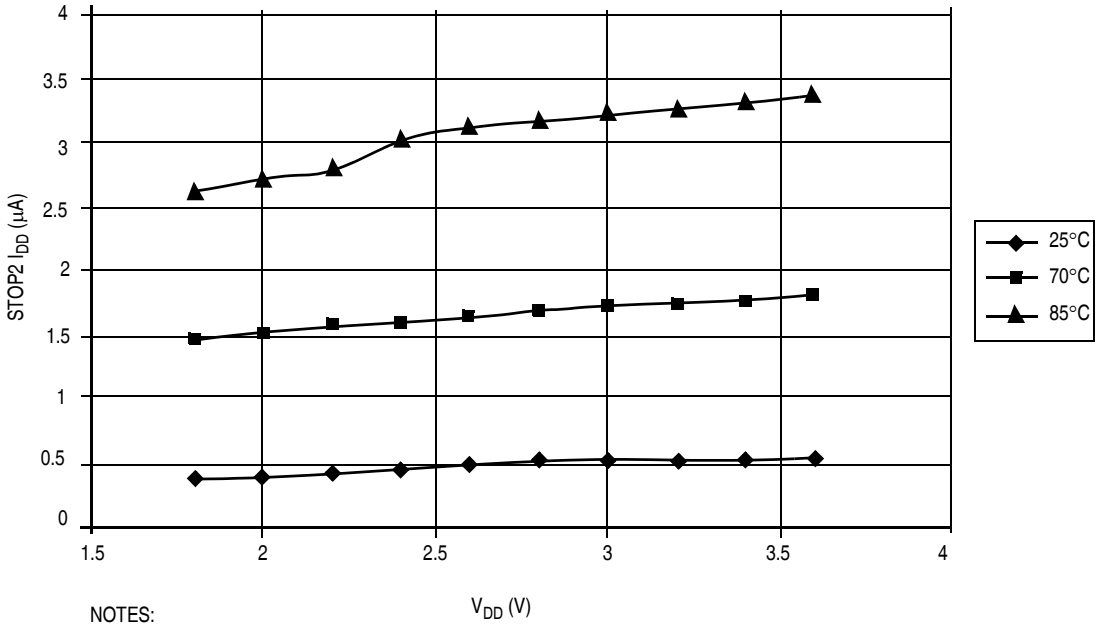

NOTES:
1. Clock sources and LVD are all disabled (OSCSTEN = LVDSE = 0).
2. All I/O are set as outputs and driven to V_{SS} with no load.

Figure A-8. Typical Stop 2 I_{DD}

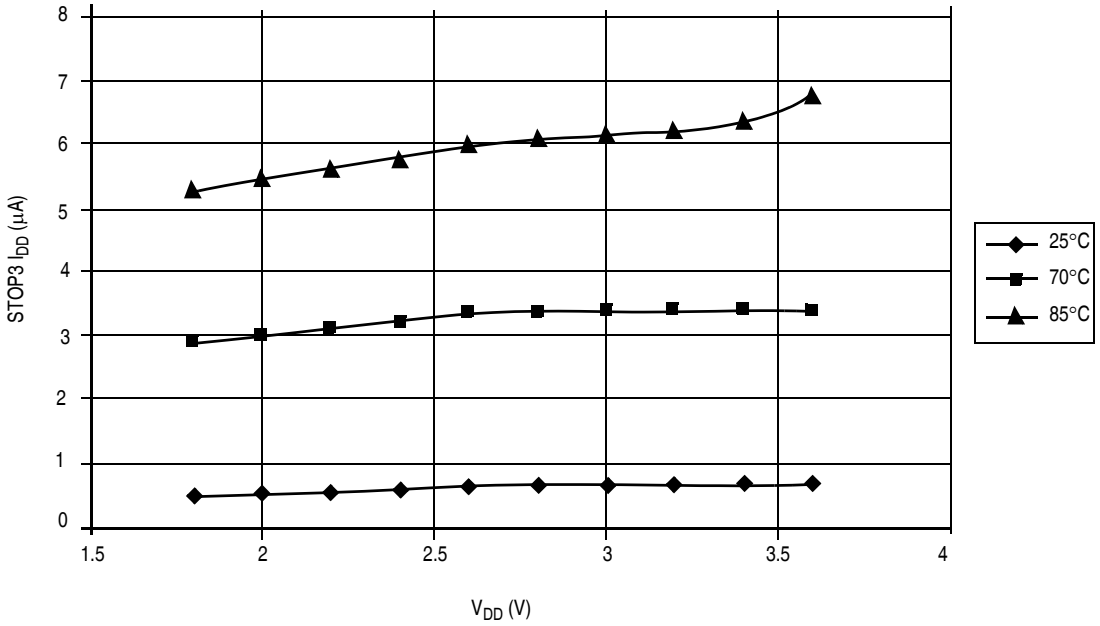

NOTES:
1. Clock sources and LVD are all disabled (OSCSTEN = LVDSE = 0).
2. All I/O are set as outputs and driven to V_{SS} with no load.

Figure A-9. Typical Stop3 I_{DD}

A.7 ATD Characteristics

Table A-6. ATD Electrical Characteristics (Operating)

No.	Characteristic	Condition	Symbol	Min	Typ	Max	Unit
1	ATD supply[1]		V_{DDAD}	1.80	—	3.6	V
2	ATD supply current	Enabled	$I_{DDADrun}$	—	0.7	1.2	mA
		Disabled (ATDPU = 0 or STOP)	$I_{DDADstop}$	—	0.02	0.6	μA
3	Differential supply voltage	$V_{DD}–V_{DDAD}$	$\|V_{DDLT}\|$	—	—	100	mV
4	Differential ground voltage	$V_{SS}–V_{SSAD}$	$\|V_{SDLT}\|$	—	—	100	mV
5	Reference potential, low		$\|V_{REFL}\|$	—	—	V_{SSAD}	V
	Reference potential, high	$2.08V \le V_{DDAD} \le 3.6V$	V_{REFH}	2.08	—	V_{DDAD}	V
		$1.80V \le V_{DDAD} < 2.08V$		V_{DDAD}	—	V_{DDAD}	
6	Reference supply current (V_{REFH} to V_{REFL})	Enabled	I_{REF}	—	200	300	μA
		Disabled (ATDPU = 0 or STOP)	I_{REF}	—	<0.01	0.02	
7	Analog input voltage[2]		V_{INDC}	$V_{SSAD} – 0.3$	—	$V_{DDAD} + 0.3$	V

[1] V_{DDAD} must be at same potential as V_{DD}.
[2] Maximum electrical operating range, not valid conversion range.

Table A-7. ATD Timing/Performance Characteristics[1]

No.	Characteristic	Condition	Symbol	Min	Typ	Max	Unit
1	ATD conversion clock frequency	$2.08V \le V_{DDAD} \le 3.6V$	f_{ATDCLK}	0.5	—	2.0	MHz
		$1.80V \le V_{DDAD} < 2.08V$		0.5	—	1.0	
2	Conversion cycles (continuous convert)[2]		CC	28	28	<30	ATDCLK cycles
3	Conversion time	$2.08V \le V_{DDAD} \le 3.6V$	T_{conv}	14.0	—	60.0	μs
		$1.80V \le V_{DDAD} < 2.08V$		28.0	—	60.0	
4	Source impedance at input[3]		R_{AS}	—	—	10	kΩ
5	Analog Input Voltage[4]		V_{AIN}	V_{REFL}		V_{REFH}	V
6	Ideal resolution (1 LSB)[5]	$2.08V \le V_{DDAD} \le 3.6V$	RES	2.031	—	3.516	mV
		$1.80V \le V_{DDAD} < 2.08V$		1.758	—	2.031	
7	Differential non-linearity[6]	$1.80V \le V_{DDAD} \le 3.6V$	DNL	—	±0.5	±1.0	LSB
8	Integral non-linearity[7]	$1.80 V \le V_{DDAD} \le 3.6V$	INL	—	±0.5	±1.0	LSB

Table A-7. ATD Timing/Performance Characteristics[1] (continued)

No.	Characteristic	Condition	Symbol	Min	Typ	Max	Unit
9	Zero-scale error[8]	$1.80V \le V_{DDAD} \le 3.6V$	E_{ZS}	—	±0.4	±1.0	LSB
10	Full-scale error[9]	$1.80V \le V_{DDAD} \le 3.6V$	E_{FS}	—	±0.4	±1.0	LSB
11	Input leakage error [10]	$1.80V \le V_{DDAD} \le 3.6V$	E_{IL}	—	±0.05	±5	LSB
12	Total unadjusted error[11]	$1.80V \le V_{DDAD} \le 3.6V$	E_{TU}	—	±1.1	±2.5	LSB

1 All ACCURACY numbers are based on processor and system being in WAIT state (very little activity and no IO switching) and that adequate low-pass filtering is present on analog input pins (filter with 0.01 μF to 0.1 μF capacitor between analog input and V_{REFL}). Failure to observe these guidelines may result in system or microcontroller noise causing accuracy errors which will vary based on board layout and the type and magnitude of the activity.

2 This is the conversion time for subsequent conversions in continuous convert mode. Actual conversion time for single conversions or the first conversion in continuous mode is extended by one ATD clock cycle and 2 bus cycles due to starting the conversion and setting the CCF flag. The total conversion time in Bus Cycles for a conversion is:

$$\text{SC Bus Cycles} = ((PRS+1)\times 2) \times (28+1) + 2 \qquad \text{CC Bus Cycles} = ((PRS+1)\times 2) \times (28)$$

3 R_{AS} is the real portion of the impedance of the network driving the analog input pin. Values greater than this amount may not fully charge the input circuitry of the ATD resulting in accuracy error.

4 Analog input must be between V_{REFL} and V_{REFH} for valid conversion. Values greater than V_{REFH} will convert to 0x3FF less the full scale error (E_{FS}).

5 The resolution is the ideal step size or 1LSB = $(V_{REFH}–V_{REFL})/1024$

6 Differential non-linearity is the difference between the current code width and the ideal code width (1LSB). The current code width is the difference in the transition voltages to and from the current code.

7 Integral non-linearity is the difference between the transition voltage to the current code and the adjusted ideal transition voltage for the current code. The adjusted ideal transition voltage is $(\text{Current Code}–1/2)\times(1/((V_{REFH}+E_{FS})–(V_{REFL}+E_{ZS})))$.

8 Zero-scale error is the difference between the transition to the first valid code and the ideal transition to that code. The Ideal transition voltage to a given code is $(\text{Code}–1/2)\times(1/(V_{REFH}–V_{REFL}))$.

9 Full-scale error is the difference between the transition to the last valid code and the ideal transition to that code. The ideal transition voltage to a given code is $(\text{Code}–1/2)\times(1/(V_{REFH}–V_{REFL}))$.

10 Input leakage error is error due to input leakage across the real portion of the impedance of the network driving the analog pin. Reducing the impedance of the network reduces this error.

11 Total unadjusted error is the difference between the transition voltage to the current code and the ideal straight-line transfer function. This measure of error includes inherent quantization error (1/2LSB) and circuit error (differential, integral, zero-scale, and full-scale) error. The specified value of E_T assumes zero E_{IL} (no leakage or zero real source impedance).

A.8 Internal Clock Generation Module Characteristics

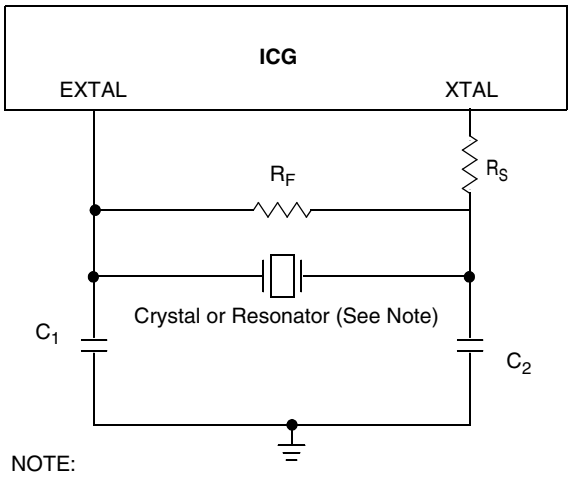

NOTE:
Use fundamental mode crystal or ceramic resonator only.

Table A-8. ICG DC Electrical Specifications (Temperature Range = –40 to 85°C Ambient)

Characteristic	Symbol	Min	Typ[1]	Max	Unit
Load capacitors	C_1 C_2	See Note [2]			
Feedback resistor Low range (32k to 100 kHz) High range (1M – 16 MHz)	R_F		 10 1		 MΩ MΩ
Series resistor Low range Low Gain (HGO = 0) High Gain (HGO = 1) High range Low Gain (HGO = 0) High Gain (HGO = 1) ≥ 8 MHz 4 MHz 1 MHz	R_S	 — — — — — —	 0 100 0 0 10 20	 — — — — — —	kΩ

[1] Data in Typical column was characterized at 3.0 V, 25°C or is typical recommended value.

[2] See crystal or resonator manufacturer's recommendation.

A.8.1 ICG Frequency Specifications

Table A-9. ICG Frequency Specifications
(V_{DDA} = V_{DDA} (min) to V_{DDA} (max), Temperature Range = –40 to 85°C Ambient)

Characteristic	Symbol	Min	Typical	Max	Unit
Oscillator crystal or resonator[4] (REFS = 1) (Fundamental mode crystal or ceramic resonator) Low range High range High Gain, FBE (HGO=1,CLKS = 10) High Gain, FEE (HGO=1,CLKS = 11) Low Power, FBE (HGO=0, CLKS=10) Low Power, FEE (HGO=0, CLKS=11)	 flo fhi_byp fhi_eng flp_byp flp_eng	 32 1 2 1 2	 — — — — —	 100 16 10 10 10	 kHz MHz MHz MHz MHz
Input clock frequency (CLKS = 11, REFS = 0) Low range High range	 f_{lo} f_{hi_eng}	 32 2	 — —	 100 10	 kHz MHz
Input clock frequency (CLKS = 10, REFS = 0)	f_{Extal}	0	—	40	MHz
Internal reference frequency (untrimmed)	$f_{ICGIRCLK}$	182.25	243	303.75	kHz
Duty cycle of input clock[4] (REFS = 0)	t_{dc}	40	—	60	%
Output clock ICGOUT frequency CLKS = 10, REFS = 0 All other cases	f_{ICGOUT}	 f_{Extal} (min) f_{lo} (min)		 f_{Extal} (max) $f_{ICGDCLKmax}$ (max)	MHz
Minimum DCO clock (ICGDCLK) frequency	$f_{ICGDCLKmin}$	8	—		MHz
Maximum DCO clock (ICGDCLK) frequency	$f_{ICGDCLKmax}$		—	40	MHz
Self-clock mode (ICGOUT) frequency [1]	f_{Self}	$f_{ICGDCLKmin}$		$f_{ICGDCLKmax}$	MHz
Self-clock mode reset (ICGOUT) frequency	f_{Self_reset}	5.5	8	10.5	MHz
Loss of reference frequency [2] Low range High range	f_{LOR}	 5 50		 25 500	kHz
Loss of DCO frequency [3]	f_{LOD}	0.5		1.5	MHz
Crystal start-up time [4, 5] Low range High range	 t_{CSTL} t_{CSTH}	 — —	 430 4	 — —	ms
FLL lock time [4, 6] Low range High range	 t_{Lockl} t_{Lockh}	 — —		 2 2	ms
FLL frequency unlock range	n_{Unlock}	–4*N		4*N	counts
FLL frequency lock range	n_{Lock}	–2*N		2*N	counts
ICGOUT period jitter, [4, 7] measured at f_{ICGOUT} Max Long term jitter (averaged over 2 ms interval)	C_{Jitter}	 —		 0.2	% f_{ICG}
Internal oscillator deviation from trimmed frequency[8] V_{DD} = 1.8 – 3.6 V, (constant temperature) V_{DD} = 3.0 V ±10%, –40° C to 85° C	ACC_{int}	 — —	 ±0.5 ±0.5	 ±2 ±2	%

[1] Self-clocked mode frequency is the frequency that the DCO generates when the FLL is open-loop.

[2] Loss of reference frequency is the reference frequency detected internally, which transitions the ICG into self-clocked mode if it is not in the desired range.

[3] Loss of DCO frequency is the DCO frequency detected internally, which transitions the ICG into FLL bypassed external mode (if an external reference exists) if it is not in the desired range.

[4] This parameter is characterized before qualification rather than 100% tested.

[5] Proper PC board layout procedures must be followed to achieve specifications.

[6] This specification applies to the period of time required for the FLL to lock after entering FLL engaged internal or external modes. If a crystal/resonator is being used as the reference, this specification assumes it is already running.

[7] Jitter is the average deviation from the programmed frequency measured over the specified interval at maximum f_{ICGOUT}. Measurements are made with the device powered by filtered supplies and clocked by a stable external clock signal. Noise injected into the FLL circuitry via V_{DDA} and V_{SSA} and variation in crystal oscillator frequency increase the C_{Jitter} percentage for a given interval.

[8] See Figure A-10

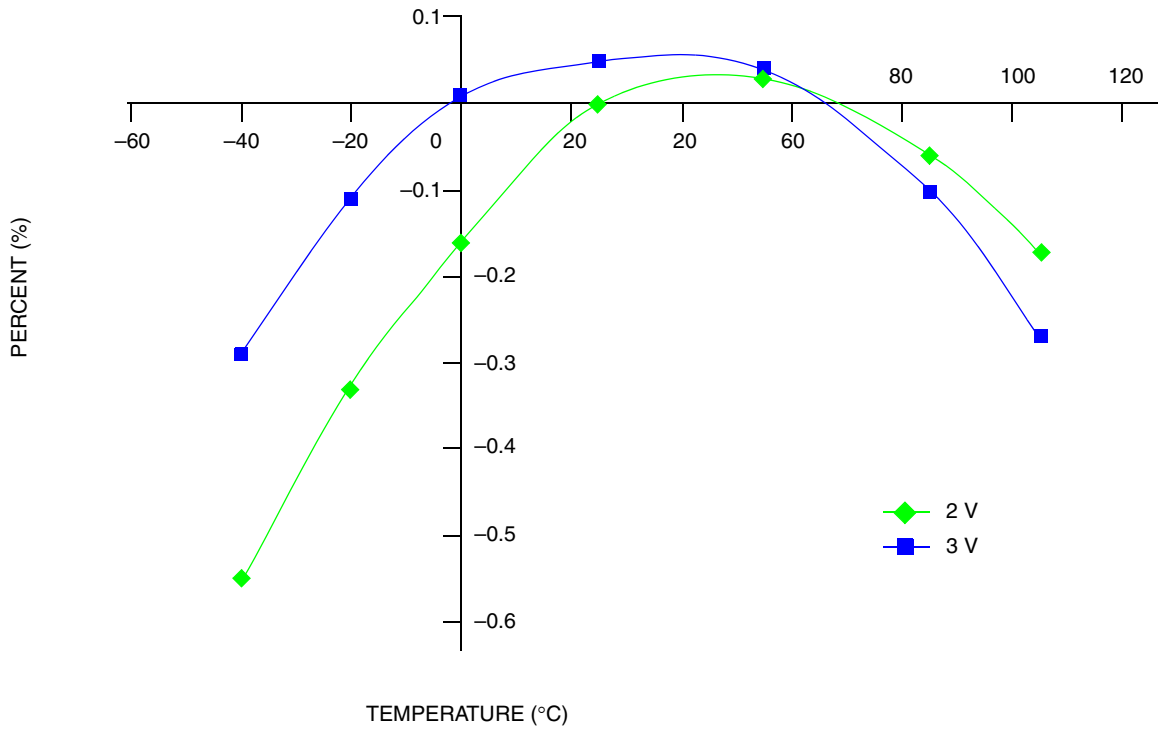

Figure A-10. Internal Oscillator Deviation from Trimmed Frequency

A.9 AC Characteristics

This section describes ac timing characteristics for each peripheral system. For detailed information about how clocks for the bus are generated, see Chapter 7, “Internal Clock Generator (S08ICGV2).”

A.9.1 Control Timing

Table A-10. Control Timing

Parameter	Symbol	Min	Typical	Max	Unit
Bus frequency (t_{cyc} = 1/f_{Bus})	f_{Bus}	dc	—	20	MHz
Real-time interrupt internal oscillator period	t_{RTI}	700		1300	μs
External reset pulse width[1]	t_{extrst}	1.5 x f_{Self_reset}		—	ns
Reset low drive[2]	t_{rstdrv}	34 x f_{Self_reset}		—	ns
Active background debug mode latch setup time	t_{MSSU}	25		—	ns
Active background debug mode latch hold time	t_{MSH}	25		—	ns
IRQ pulse width[3]	t_{ILIH}	1.5 x t_{cyc}		—	ns
Port rise and fall time (load = 50 pF)[4] Slew rate control disabled Slew rate control enabled	t_{Rise}, t_{Fall}	— —	3 30		ns

1 This is the shortest pulse that is guaranteed to be recognized as a reset pin request. Shorter pulses are not guaranteed to override reset requests from internal sources.

2 When any reset is initiated, internal circuitry drives the reset pin low for about 34 cycles of f_{Self_reset} and then samples the level on the reset pin about 38 cycles later to distinguish external reset requests from internal requests.

3 This is the minimum pulse width that is guaranteed to pass through the pin synchronization circuitry. Shorter pulses may or may not be recognized. In stop mode, the synchronizer is bypassed so shorter pulses can be recognized in that case.

4 Timing is shown with respect to 20% V_{DD} and 80% V_{DD} levels. Temperature range –40°C to 85°C.

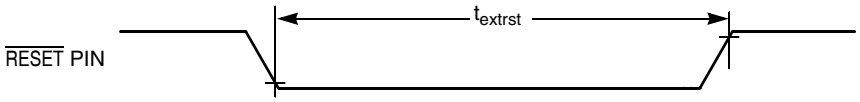

Figure A-11. Reset Timing

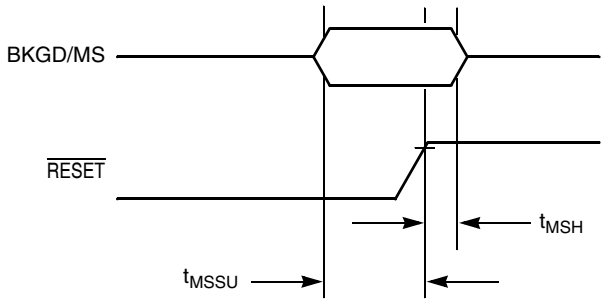

Figure A-12. Active Background Debug Mode Latch Timing

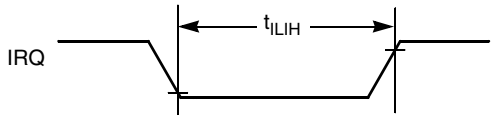

Figure A-13. IRQ Timing

A.9.2 Timer/PWM (TPM) Module Timing

Synchronizer circuits determine the shortest input pulses that can be recognized or the fastest clock that can be used as the optional external source to the timer counter. These synchronizers operate from the current bus rate clock.

Table A-11. TPM Input Timing

Function	Symbol	Min	Max	Unit
External clock frequency	f_{TPMext}	dc	$f_{Bus}/4$	MHz
External clock period	t_{TPMext}	4	—	t_{cyc}
External clock high time	t_{clkh}	1.5	—	t_{cyc}
External clock low time	t_{clkl}	1.5	—	t_{cyc}
Input capture pulse width	t_{ICPW}	1.5	—	t_{cyc}

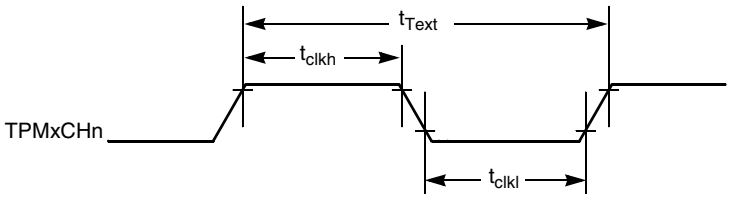

Figure A-14. Timer External Clock

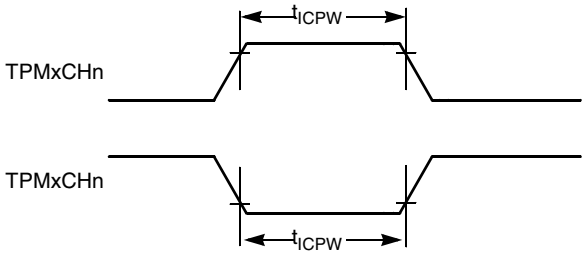

Figure A-15. Timer Input Capture Pulse

A.9.3 SPI Timing

Table A-12 and Figure A-16 through Figure A-19 describe the timing requirements for the SPI system.

Table A-12. SPI Timing

No.	Function	Symbol	Min	Max	Unit
	Operating frequency Master Slave	f_{op}	$f_{Bus}/2048$ dc	$f_{Bus}/2$ $f_{Bus}/4$	Hz
1	SCK period Master Slave	t_{SCK}	2 4	2048 —	t_{cyc} t_{cyc}
2	Enable lead time Master Slave	t_{Lead}	1/2 1	— —	t_{SCK} t_{cyc}
3	Enable lag time Master Slave	t_{Lag}	1/2 1	— —	t_{SCK} t_{cyc}
4	Clock (SCK) high or low time Master Slave	t_{WSCK}	$t_{cyc} – 30$ $t_{cyc} – 30$	1024 t_{cyc} —	ns ns
5	Data setup time (inputs) Master Slave	t_{SU}	15 15	— —	ns ns
6	Data hold time (inputs) Master Slave	t_{HI}	0 25	— —	ns ns
7	Slave access time	t_a	—	1	t_{cyc}
8	Slave MISO disable time	t_{dis}	—	1	t_{cyc}
9	Data valid (after SCK edge) Master Slave	t_v	— —	25 25	ns ns
10	Data hold time (outputs) Master Slave	t_{HO}	0 0	— —	ns ns
11	Rise time Input Output	t_{RI} t_{RO}	— —	$t_{cyc} – 25$ 25	ns ns
12	Fall time Input Output	t_{FI} t_{FO}	— —	$t_{cyc} – 25$ 25	ns ns

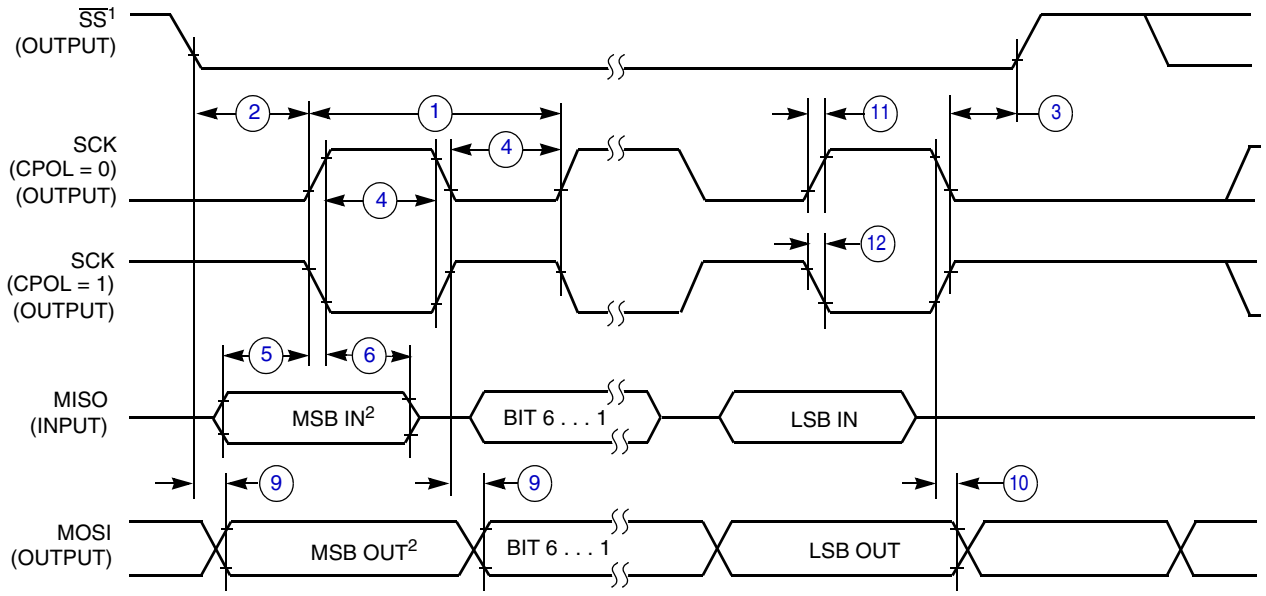

NOTES:
1. $\overline{SS}$ output mode (DDS7 = 1, SSOE = 1).
2. LSBF = 0. For LSBF = 1, bit order is LSB, bit 1, ..., bit 6, MSB.

Figure A-16. SPI Master Timing (CPHA = 0)

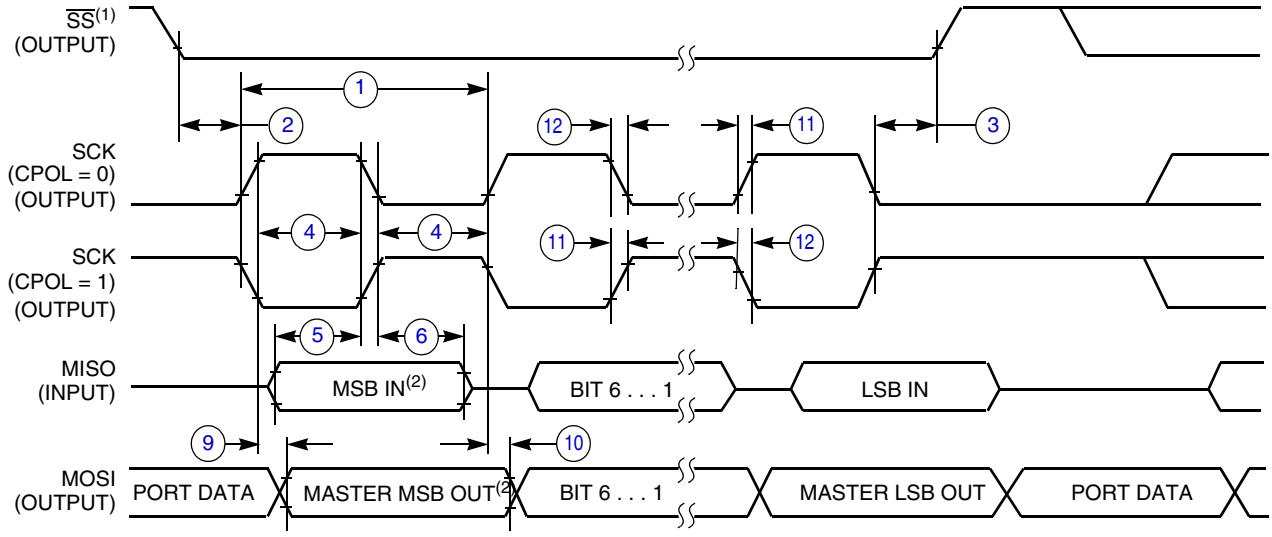

NOTES:
1. $\overline{SS}$ output mode (DDS7 = 1, SSOE = 1).
2. LSBF = 0. For LSBF = 1, bit order is LSB, bit 1, ..., bit 6, MSB.

Figure A-17. SPI Master Timing (CPHA = 1)

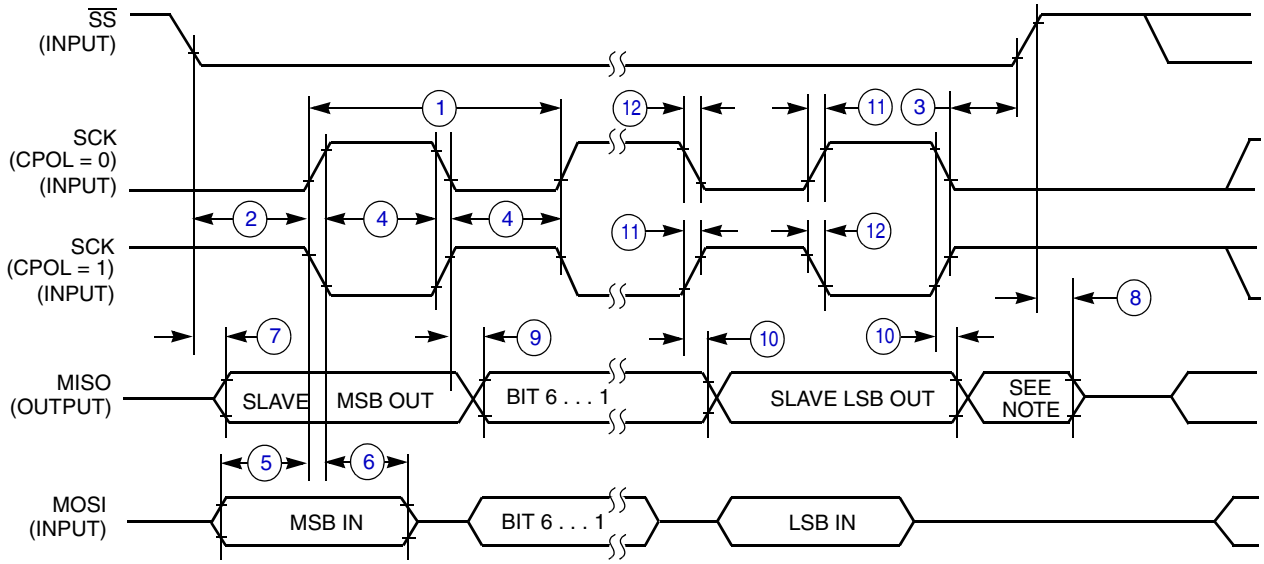

NOTE:

1. Not defined but normally MSB of character just received

Figure A-18. SPI Slave Timing (CPHA = 0)

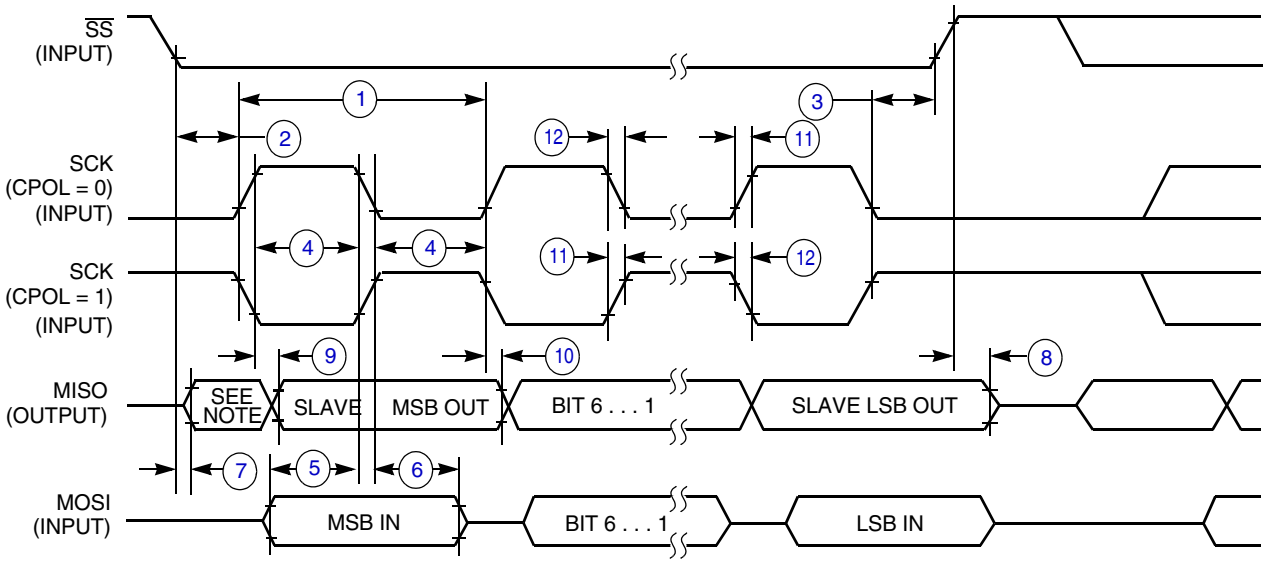

NOTE:

1. Not defined but normally LSB of character just received

Figure A-19. SPI Slave Timing (CPHA = 1)

A.10 Flash Specifications

This section provides details about program/erase times and program-erase endurance for the flash memory.

Program and erase operations do not require any special power sources other than the normal V_{DD} supply. For more detailed information about program/erase operations, see Chapter 4, "Memory."

Table A-13. Flash Characteristics

Characteristic	Symbol	Min	Typical	Max	Unit
Supply voltage for program/erase	$V_{prog/erase}$	1.8		3.6	V
Supply voltage for read operation $0 < f_{Bus} < 8$ MHz $0 < f_{Bus} < 20$ MHz	V_{Read}	1.8 2.08		3.6 3.6	V
Internal FCLK frequency[1]	f_{FCLK}	150		200	kHz
Internal FCLK period (1/FCLK)	t_{Fcyc}	5		6.67	µs
Byte program time (random location)(2)	t_{prog}	9			t_{Fcyc}
Byte program time (burst mode)(2)	t_{Burst}	4			t_{Fcyc}
Page erase time[2]	t_{Page}	4000			t_{Fcyc}
Mass erase time(2)	t_{Mass}	20,000			t_{Fcyc}
Program/erase endurance[3] T_L to T_H = –40°C to + 85°C T = 25°C		10,000	 100,000	— —	cycles
Data retention[4]	t_{D_ret}	15	100	—	years

1 The frequency of this clock is controlled by a software setting.

2 These values are hardware state machine controlled. User code does not need to count cycles. This information supplied for calculating approximate time to program and erase.

3 **Typical endurance for flash** was evaluated for this product family on the 9S12Dx64. For additional information on how Freescale Semiconductor defines typical endurance, please refer to Engineering Bulletin EB619/D, *Typical Endurance for Nonvolatile Memory.*

4 **Typical data retention** values are based on intrinsic capability of the technology measured at high temperature and de-rated to 25°C using the Arrhenius equation. For additional information on how Freescale Semiconductor defines typical data retention, please refer to Engineering Bulletin EB618/D, *Typical Data Retention for Nonvolatile Memory.*

Appendix B
EB652: Migrating from the GB60 Series to the GB60A Series

The following text was taken from Freescale Semiconductor document EB652. It is copied here for your conveninece. Please see EB652 at freescale.com for the must up-to-date information regarding “Migrating from the GB60 series to the GB60A series.”

B.1 Overview

This document will explain the differences to be aware of when migrating from the MC9S08GB60, MC9S08GB32, MC9S08GT60, and MC9S08GT32 devices to the MC9S08GB60A, MC9S08GB32A, MC9S08GT60A and MC9S08GT32A devices. For the remainder of this document, GB60 series will refer to the original non-”A” devices and GB60A series will refer to the newer “A” suffix devices.

Much of the functionality and performance of the GB60 series and the GB60A series will be identical. However, there are several differences designers should understand when migrating to the GB60A series.

B.2 Flash Programming Voltage

The GB60 series has a minimum V_{DD} requirement for erasing and programming the flash, equal to 2.1 V. The GB60A series eliminates this minimum V_{DD} requirement. On the GB60A series, the flash can be programmed and erased across the full operating voltage range of the MCU, or 1.8 V to 3.6 V.

B.3 Flash Block Protection: 60K Devices Only

The GB/GT60 flash block protection has a redundant setting. On the GB/GT60A, the redundant setting is used to add a new protection option.

On the GB/GT60, when protection is enabled by setting the FPDIS bit, setting the FPS2:FPS1:FPS0 bits to 1:1:1 protects the same range as 1:1:0, which is locations $8000 to $FFFF.

On the GB/GT60A, setting the FPS2:FPS1:FPS0 bits to 1:1:0, protects the same range as on the GB/GT60. However, setting the bits to 1:1:1 protects locations $182C to $FFFF, leaving locations $1080 to $17FF open to reprogramming.

This new protection option is useful for protecting the main user program area while leaving a small section of 1920 bytes available for data storage.

B.4 Internal Clock Generator: High Gain Oscillator Option

The GB60 series only has a low-power external oscillator, designed for the low current consumption. The GB60A series has a second external oscillator option: a high gain external oscillator which provides

improved noise immunity in the oscillator circuit. The low-power oscillator is also available for power-sensitive applications.

This new oscillator option available on the GB60A series is selected by a new control bit in the ICG control register 1 (ICGC1): the HGO bit. HGO is bit 7 of the ICGC1 register, formerly an unimplemented bit that always read ‘0’. The reset value is ‘0’, which selects the low-power oscillator option—which is consistent with the GB60 series external oscillator.

Setting HGO to ‘1’ selects the high gain external oscillator which increases the voltage swing across the external crystal or resonator, making it more immune to external noise.

The values of the feedback and series resistors for the external oscillator will be different in most cases between HGO=0 and HGO=1. Consult the ICG DC Electrical Specifications table in the MC9S08GB60A data sheet for the proper values.

B.5 Internal Clock Generator: Low-Power Oscillator Maximum Frequency

On the GB60 series, the external oscillator’s maximum frequency is 10 MHz when in FEE mode and 16 MHz when in FBE mode.

On the GB60A series, when HGO=1, the same maximum frequencies apply. However, when HGO=0, the maximum frequency is 10 MHz in FEE and FBE modes.

B.6 Internal Clock Generator: Loss-of-Clock Disable Option

The ICG module has a clock monitor which will generate a loss-of-clock signal when either the reference clock or the DCO clock does not meet minimum frequency requirements. This signal is used to generate either a reset or an interrupt, depending on the settings in the ICGC2 register.

On the GB60 series, this clock monitor cannot be turned on or off by the user. The on/off status of the clock monitor is determined by the state of the ICG module.

On the GB60A series, an option has been added to allow the user to disable the clock monitor. A new control bit, LOCD, has been added to the ICGC1 register at bit position 1, formerly an unimplemented bit. The reset state is ‘0’, which enables the clock monitor. Setting LOCD = 1 will disable the clock monitor and thereby eliminate any loss-of-clock resets or interrupts.

The advantage of disabling the clock monitor is to reduce the current draw of the ICG module. Disabling the clock monitor when running in stop3 mode with a low-range external oscillator enabled will save approximately 9 μA of current. With LOCD=0 in this configuration, the stop3 I_{DD} is about 14 μA. When LOCD=1 in this configuration, the stop I_{DD} is about 5 μA.

For the best combination of power conservation and system protection, Freescale Semiconductor recommends setting the LOCD=0 whenever the MCU is in active run mode and then setting LOCD=1 just before entering stop3 mode when OSCSTEN=1. If OSCSTEN=0, then the LOCD bit will not make a difference in the stop3 current.

B.7 System Device Identification Register

The system device identification register (SDIR) is a 16-bit value that contains a 12-bit part identification number and a 4-bit mask revision number. Both the GB60 series and the GB60A series have the same part identification number, $002.

The mask revision number for the last production version of the GB60 series is $4. The first mask revision number for the GB60A series is $8.

Appendix C
Ordering Information and Mechanical Drawings

C.1 Ordering Information

This section contains ordering numbers for MC9S08GB60A, MC9S08GB32A, MC9S08GT60A, and MC9S08GT32A devices. See below for an example of the device numbering system.

Table C-1. Device Numbering System

Device Number	Flash Memory	RAM	TPM	Available Package Type
MC9S08GB60A	60K	4K	One 3-channel and one 5-channel 16-bit timer	64 LQFP
MC9S08GB32A	32K	2K	One 3-channel and one 5-channel 16-bit timer	64 LQFP
MC9S08GT60A	60K	4K	One 3-channel and one 2-channel 16-bit timer	48 QFN
			Two 2-channel/16-bit timers	44 QFP 42 SDIP
MC9S08GT32A	32K	2K	One 3-channel and one 2-channel 16-bit timer	48 QFN
			Two 2-channel/16-bit timers	44 QFP 42 SDIP

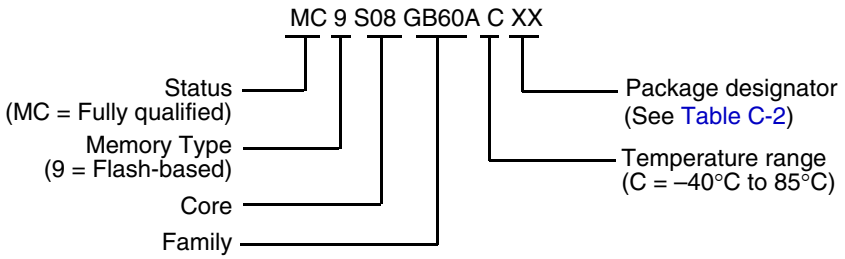

Table C-2. Package Information

Pin Count	Type	Designator	Document No.
64	LQFP — Low Quad Flat Package	FU	98ASS23234W
48	QFN — Quad Flat Package, No Leads	FD	98ARH99048A
44	QFP — Quad Flat Package	FB	98ASB42839B
42	SDIP — Skinny Dual In-Line Package	B	98ASB42767B

C.2 Mechanical Drawings

The following pages are mechanical drawings for the packages provided in Table C-2.

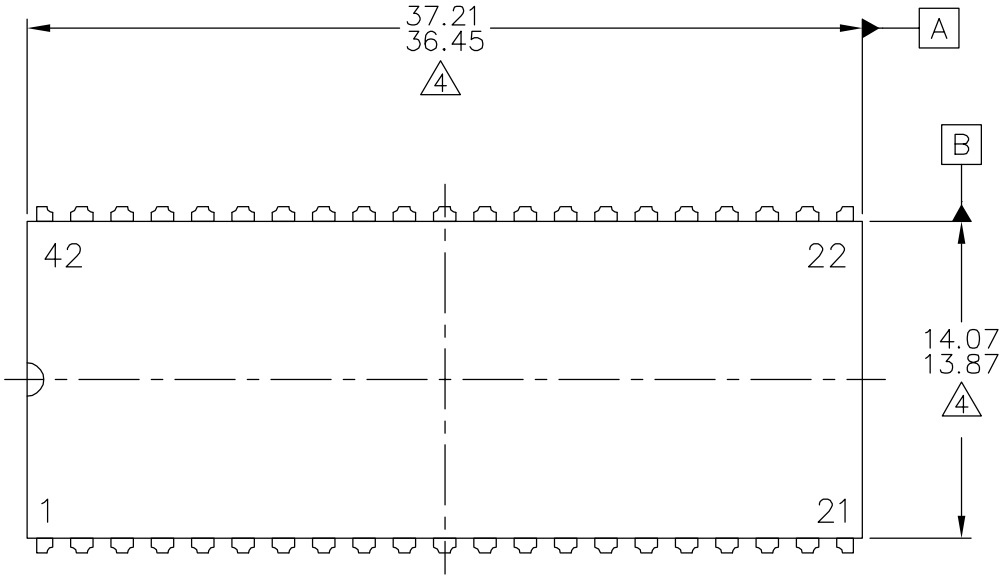

TOP VIEW

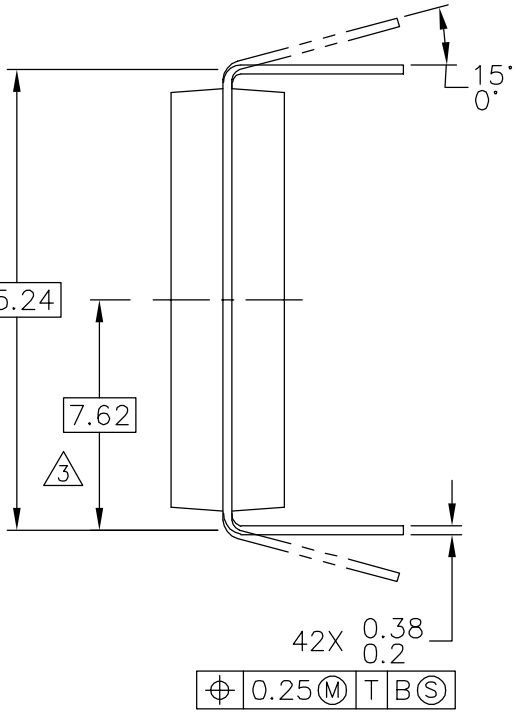

END VIEW

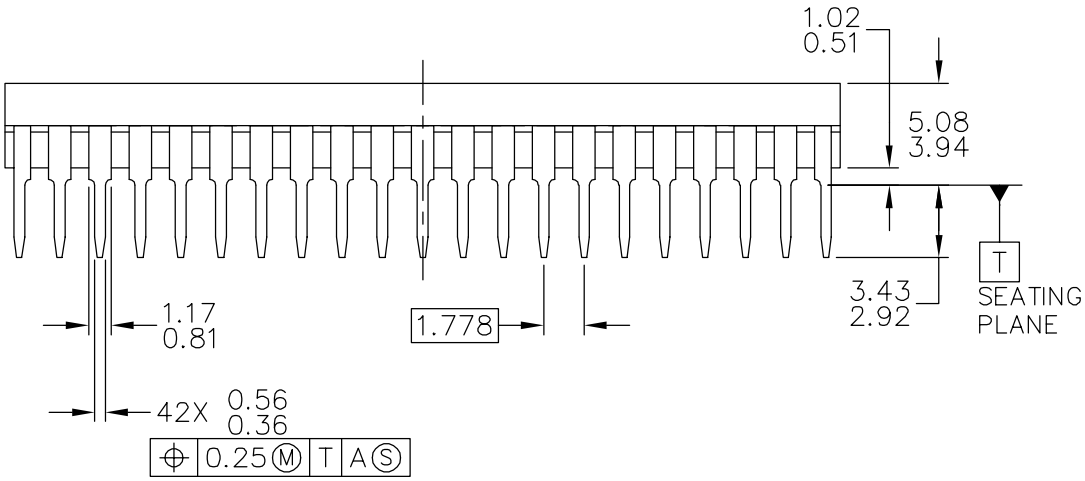

SIDE VIEW

© FREESCALE SEMICONDUCTOR, INC. ALL RIGHTS RESERVED.	**MECHANICAL OUTLINE**	PRINT VERSION NOT TO SCALE
TITLE: 42 LD PDIP	DOCUMENT NO: 98ASB42767B	REV: A
	CASE NUMBER: 858-01	24 OCT 2005
	STANDARD: NON-JEDEC	

NOTES:

1. DIMENSIONING AND TOLERANCING PER ASME Y14.5M-1994.

2. ALL DIMENSIONS IN MILLIMETERS.

3. DIMENSION TO CENTER OF LEAD WHEN FORMED PARALLEL.

4. DIMENSION DOES NOT INCLUDE MOLD FLASH. MAXIMUM MOLD FLASH 0.25.

© FREESCALE SEMICONDUCTOR, INC.
ALL RIGHTS RESERVED.

MECHANICAL OUTLINE	PRINT VERSION NOT TO SCALE	
TITLE: 42 LD PDIP	DOCUMENT NO: 98ASB42767B	REV: A
	CASE NUMBER: 858-01	24 OCT 2005
	STANDARD: NON JEDEC	

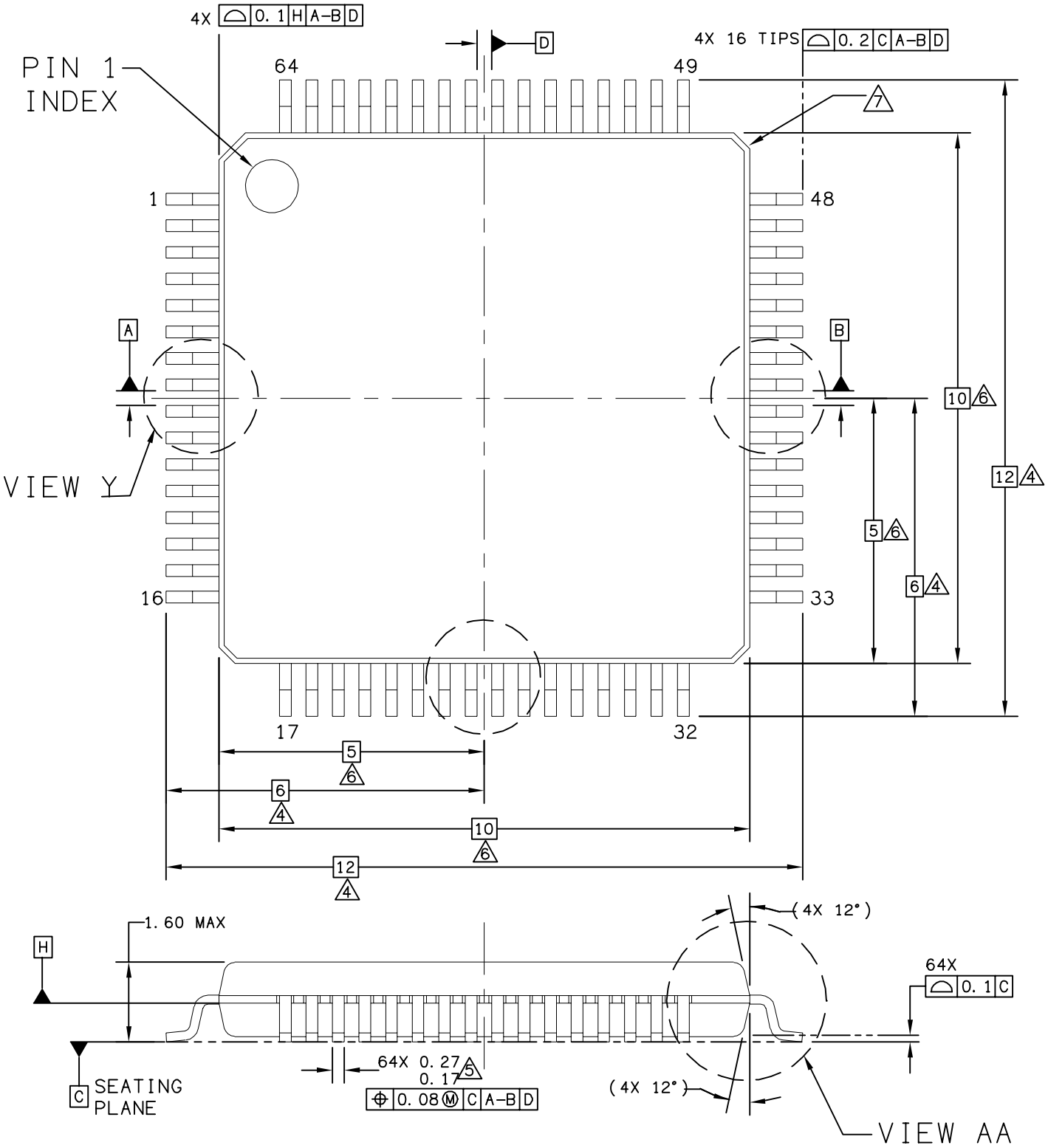

© FREESCALE SEMICONDUCTOR, INC. ALL RIGHTS RESERVED.	MECHANICAL OUTLINE	PRINT VERSION NOT TO SCALE

TITLE: 64LD LQFP, 10 X 10 X 1.4 PKG, 0.5 PITCH, CASE OUTLINE	DOCUMENT NO: 98ASS23234W	REV: D
	CASE NUMBER: 840F-02	06 APR 2005
	STANDARD: JEDEC MS-026 BCD	

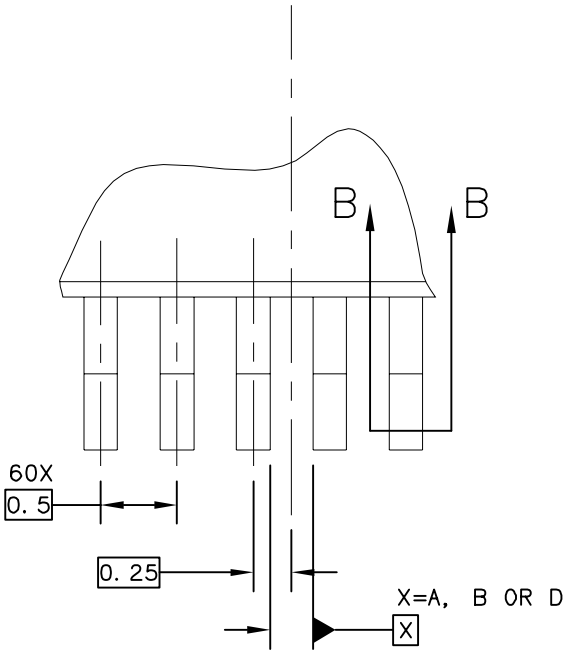

VIEW Y

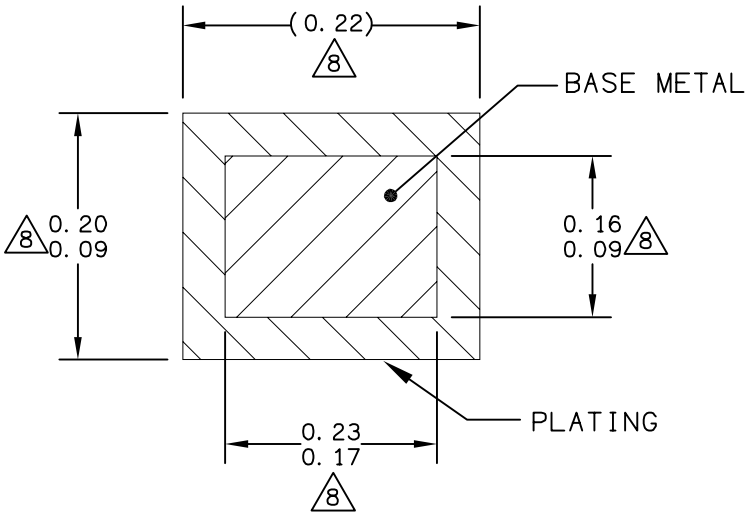

SECTION B–B

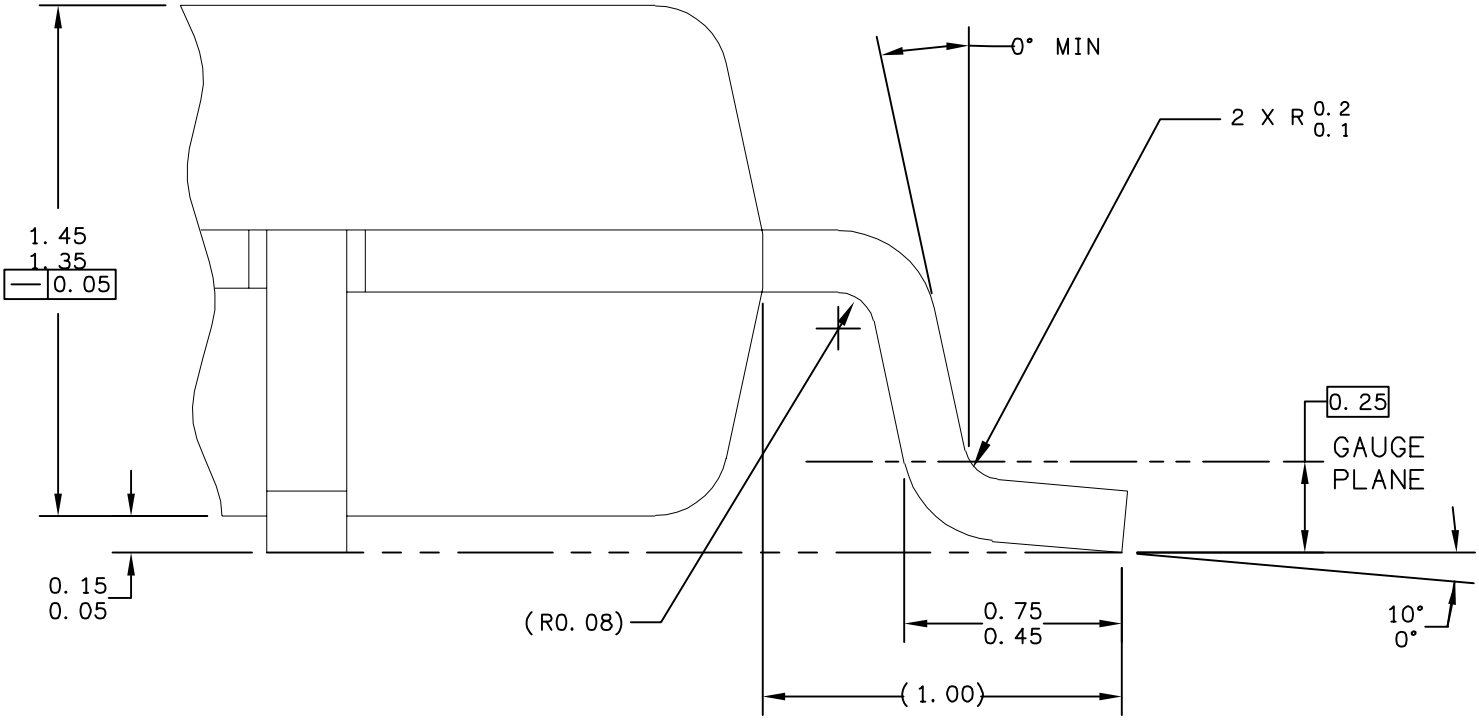

VIEW AA

© FREESCALE SEMICONDUCTOR, INC. ALL RIGHTS RESERVED.	MECHANICAL OUTLINE	PRINT VERSION NOT TO SCALE
TITLE: 64LD LQFP, 10 X 10 X 1.4 PKG, 0.5 PITCH, CASE OUTLINE	DOCUMENT NO: 98ASS23234W	REV: D
	CASE NUMBER: 840F-02	06 APR 2005
	STANDARD: JEDEC MS-026 BCD	

NOTES:

1. DIMENSIONS ARE IN MILLIMETERS.

2. DIMENSIONING AND TOLERANCING PER ASME Y14.5M-1994.

3. DATUMS A, B AND D TO BE DETERMINED AT DATUM PLANE H.

4. DIMENSIONS TO BE DETERMINED AT SEATING PLANE C.

5. THIS DIMENSION DOES NOT INCLUDE DAMBAR PROTRUSION. ALLOWABLE DAMBAR PROTRUSION SHALL NOT CAUSE THE LEAD WIDTH TO EXCEED THE UPPER LIMIT BY MORE THAN 0.08 mm AT MAXIMUM MATERIAL CONDITION. DAMBAR CANNOT BE LOCATED ON THE LOWER RADIUS OR THE FOOT. MINIMUM SPACE BETWEEN PROTRUSION AND ADJACENT LEAD SHALL NOT BE LESS THAN 0.07 mm.

6. THIS DIMENSION DOES NOT INCLUDE MOLD PROTRUSION. ALLOWABLE PROTRUSION IS 0.25 mm PER SIDE. THIS DIMENSION IS MAXIMUM PLASTIC BODY SIZE DIMENSION INCLUDING MOLD MISMATCH.

7. EXACT SHAPE OF EACH CORNER IS OPTIONAL.

8. THESE DIMENSIONS APPLY TO THE FLAT SECTION OF THE LEAD BETWEEN 0.1 mm AND 0.25 mm FROM THE LEAD TIP.

© FREESCALE SEMICONDUCTOR, INC.
ALL RIGHTS RESERVED.

MECHANICAL OUTLINE	PRINT VERSION NOT TO SCALE

TITLE: 64LD LQFP, 10 X 10 X 1.4 PKG, 0.5 PITCH, CASE OUTLINE	DOCUMENT NO: 98ASS23234W	REV: D
	CASE NUMBER: 840F-02	06 APR 2005
	STANDARD: JEDEC MS-026 BCD	

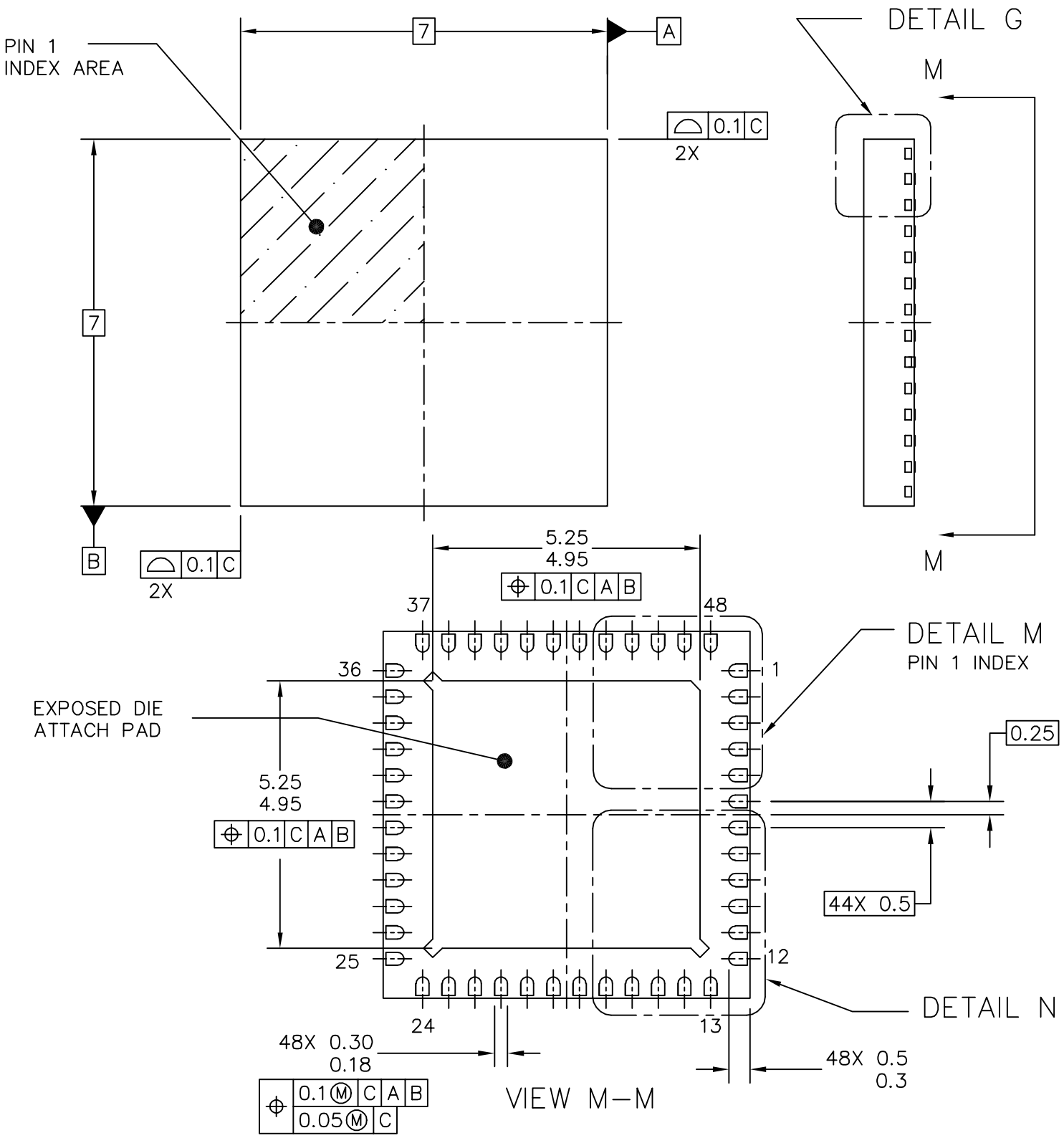

© FREESCALE SEMICONDUCTOR, INC. ALL RIGHTS RESERVED.	**MECHANICAL OUTLINE**	PRINT VERSION NOT TO SCALE
TITLE: THERMALLY ENHANCED QUAD FLAT NON–LEADED PACKAGE (QFN) 48 TERMINAL, 0.5 PITCH (7 X 7 X 1)	DOCUMENT NO: 98ARH99048A	REV: E
	CASE NUMBER: 1314–04	20 APR 2005
	STANDARD: JEDEC–MO–220 VKKD–2	

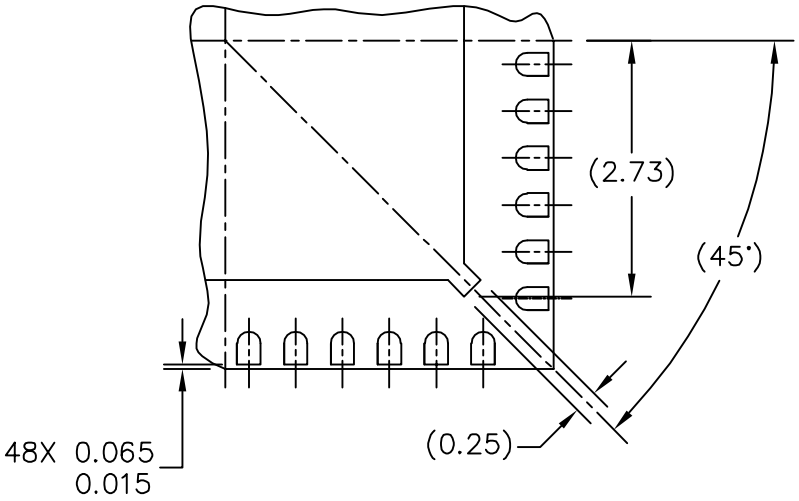

DETAIL N
PREFERRED CORNER CONFIGURATION

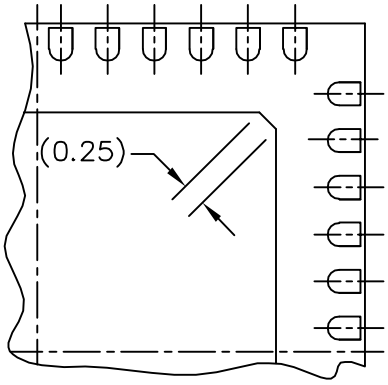

DETAIL M
PREFERED PIN 1 BACKSIDE IDENTIFIER

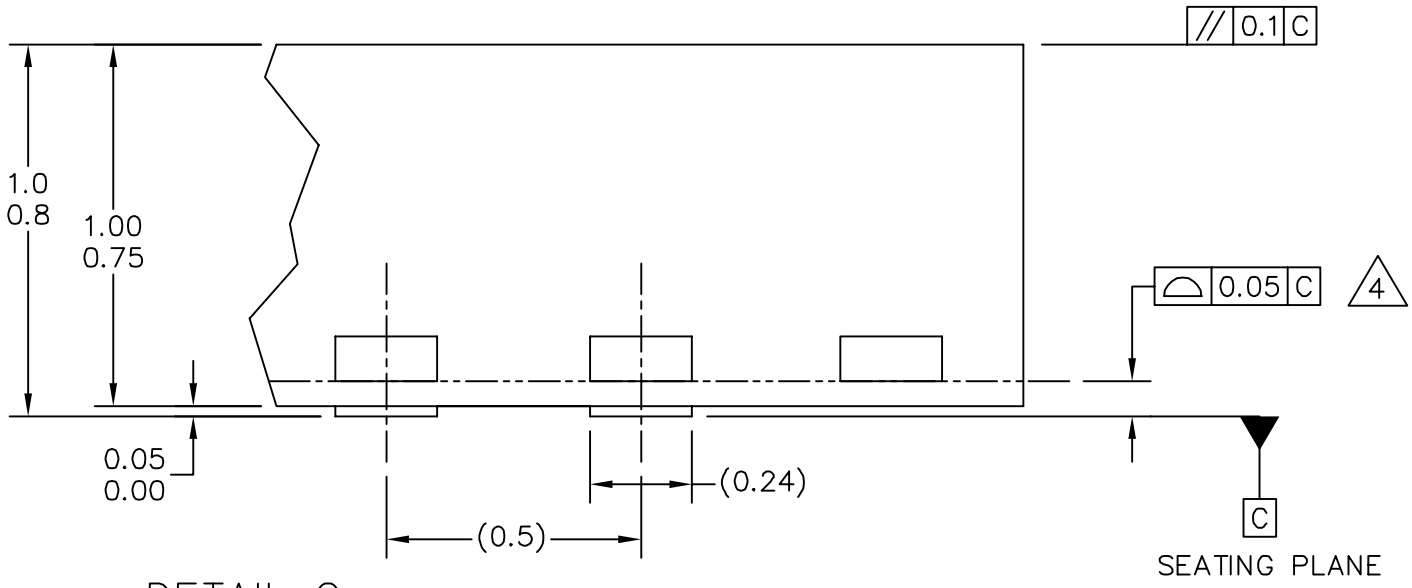

DETAIL G
VIEW ROTATED 90° CW

© FREESCALE SEMICONDUCTOR, INC. ALL RIGHTS RESERVED.	**MECHANICAL OUTLINE**	PRINT VERSION NOT TO SCALE
TITLE: THERMALLY ENHANCED QUAD FLAT NON-LEADED PACKAGE (QFN) 48 TERMINAL, 0.5 PITCH (7 X 7 X 1)	DOCUMENT NO: 98ARH99048A	REV: E
	CASE NUMBER: 1314-04	20 APR 2005
	STANDARD: JEDEC-MO-220 VKKD-2	

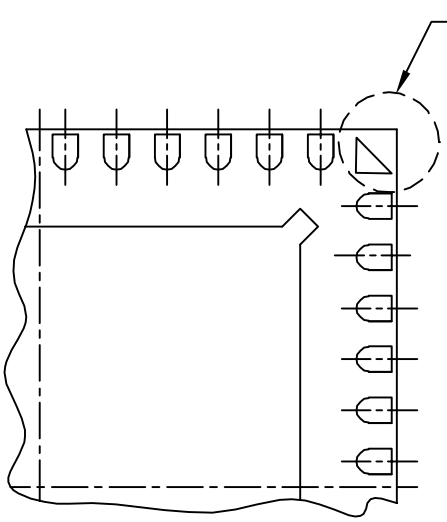

DETAIL M
PIN 1 BACKSIDE IDENTIFIER OPTION

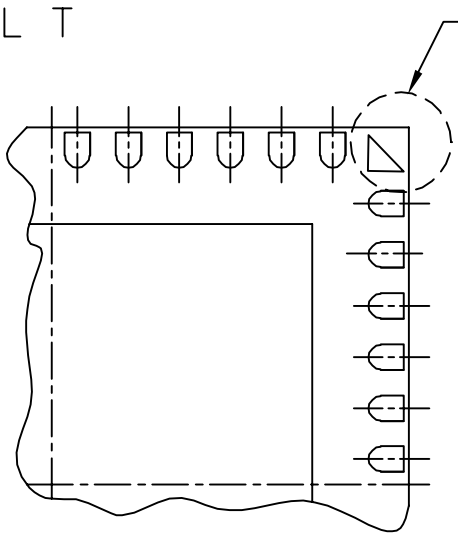

DETAIL M
PIN 1 BACKSIDE IDENTIFIER OPTION

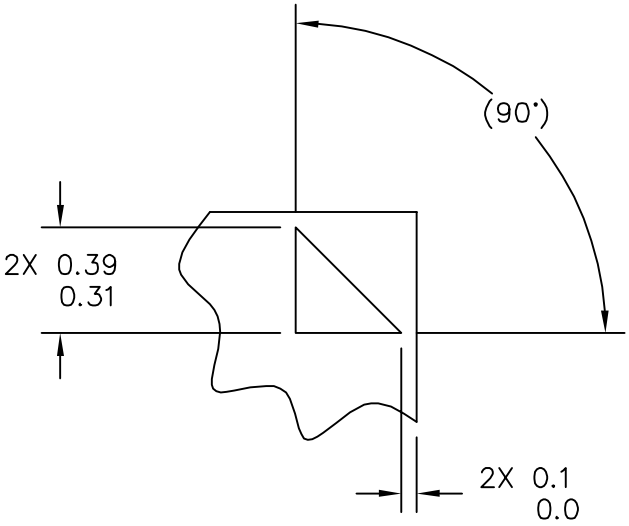

DETAIL T

© FREESCALE SEMICONDUCTOR, INC. ALL RIGHTS RESERVED.	**MECHANICAL OUTLINE**	PRINT VERSION NOT TO SCALE
TITLE: THERMALLY ENHANCED QUAD FLAT NON-LEADED PACKAGE (QFN) 48 TERMINAL, 0.5 PITCH (7 X 7 X 1)	DOCUMENT NO: 98ARH99048A	REV: E
	CASE NUMBER: 1314-04	20 APR 2005
	STANDARD: JEDEC-MO-220 VKKD-2	

NOTES:

1. DIMENSIONS ARE IN MILLIMETERS.
2. INTERPRET DIMENSIONS AND TOLERANCES PER ASME Y14.5M–1994.
3. THE COMPLETE JEDEC DESIGNATOR FOR THIS PACKAGE IS: HF–PQFN.
4. COPLANARITY APPLIES TO LEADS, CORNER LEADS, AND DIE ATTACH PAD.
5. MIN METAL GAP SHOULD BE 0.2MM.

© FREESCALE SEMICONDUCTOR, INC.
ALL RIGHTS RESERVED.

MECHANICAL OUTLINE

PRINT VERSION NOT TO SCALE

TITLE: THERMALLY ENHANCED QUAD FLAT NON–LEADED PACKAGE (QFN) 48 TERMINAL, 0.5 PITCH (7 X 7 X 1)	DOCUMENT NO: 98ARH99048A	REV: E
	CASE NUMBER: 1314–04	20 APR 2005
	STANDARD: JEDEC–MO–220 VKKD–2	

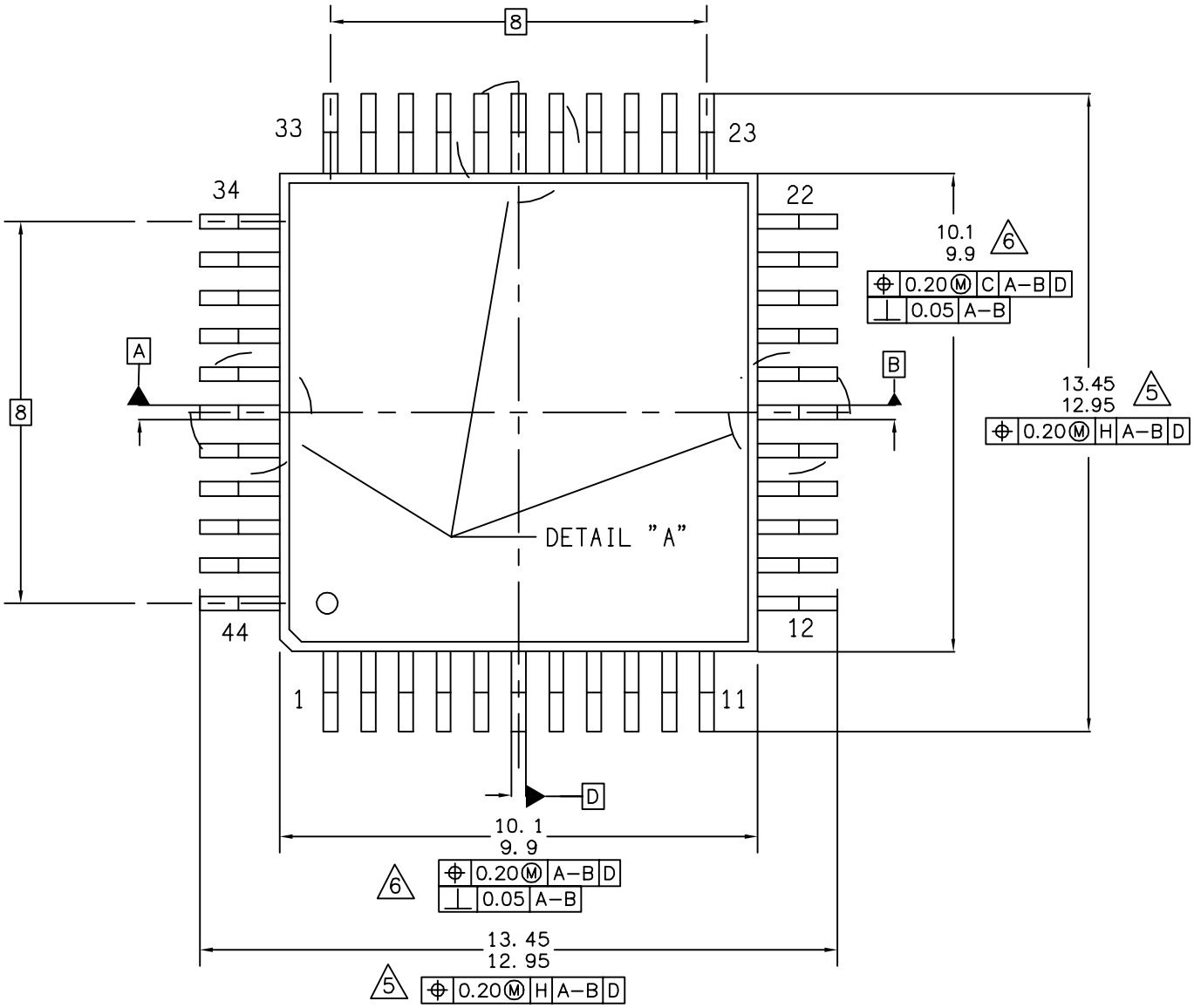

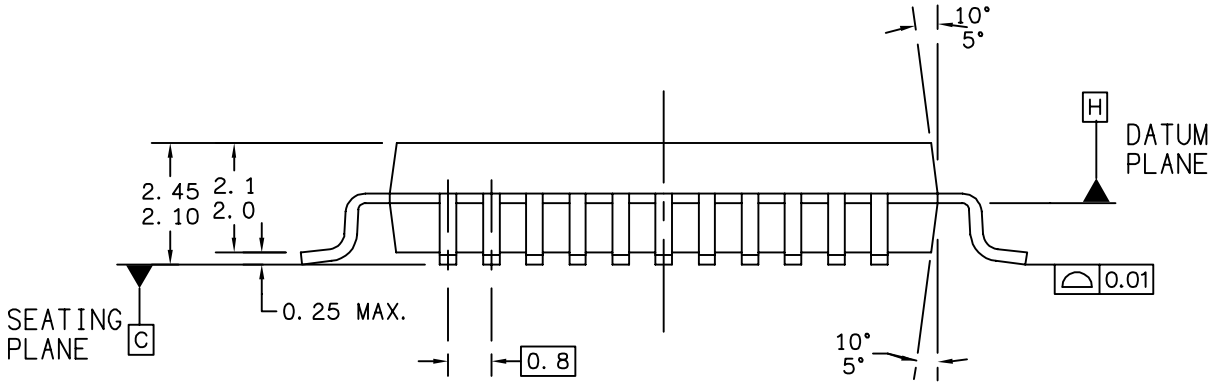

© FREESCALE SEMICONDUCTOR, INC. ALL RIGHTS RESERVED.	**MECHANICAL OUTLINE**	PRINT VERSION NOT TO SCALE
TITLE: 44LD QFP, 10X10X2. 0 PKG, 0. 8 PITCH	DOCUMENT NO: 98ASB42839B	REV: B
	CASE NUMBER: 824A-01	06 APR 2005
	STANDARD: NON-JEDEC	

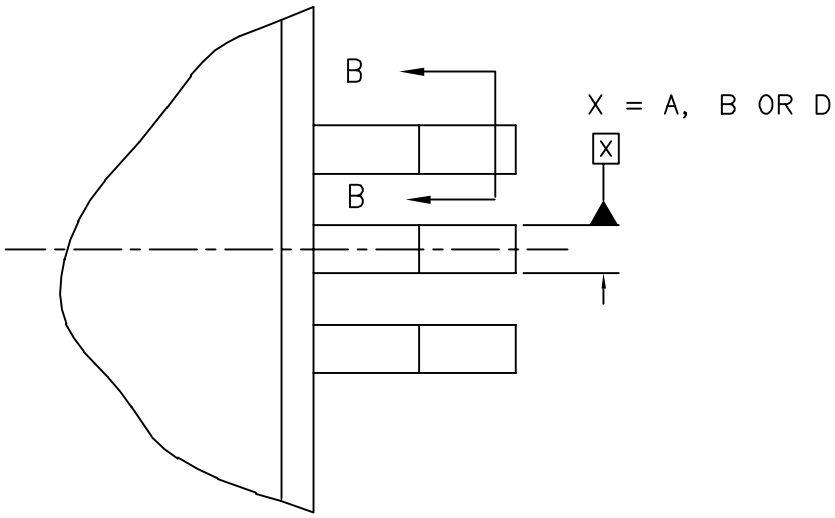

DETAIL "A"

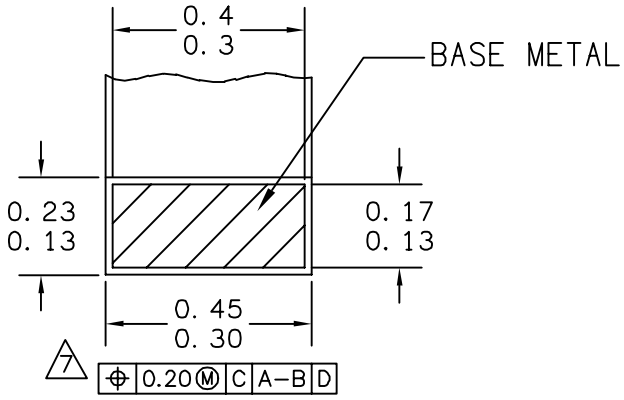

SECTION B-B

VIEW ROTATED 90°

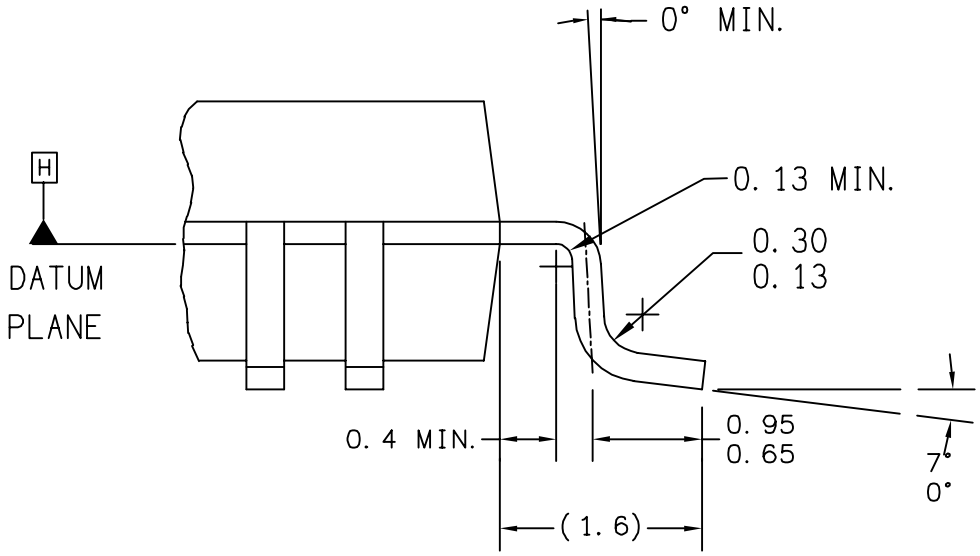

DETAIL "C"

© FREESCALE SEMICONDUCTOR, INC. ALL RIGHTS RESERVED.	**MECHANICAL OUTLINE**	PRINT VERSION NOT TO SCALE
TITLE: 44LD QFP, 10X10X2.0 PKG, 0.8 PITCH	DOCUMENT NO: 98ASB42839B	REV: B
	CASE NUMBER: 824A-01	06 APR 2005
	STANDARD: NON-JEDEC	

NOTES:

1. DIMENSIONS AND TOLERANCING PER ASME Y14.5M, 1994.

2. CONTROLLING DIMENSION: MILLIMETER.

3. DATUMPLANE -H- IS LOCATED AT BOTTOM OF LEAD AND IS COINCIDENT WITH THE LEAD WHERE THE LEAD EXITS THE PLASTIC BODY AT THE BOTTOM OF THE PARTING LINE.

4. DATUMS A-B AND -D- TO BE DETERMINED AT DATUM PLANE -H-.

5. THIS DIMENSION TO BE DETERMINED AT SEATING PLANE -C-.

6. THIS DIMENSION DO NOT INCLUDE MOLD PROTRUSION, ALLOWABLE PROTRUSION IS 0.25 PER SIDE, DIMENSIONS A AND B DO INCLUDE MOLD MISMATCH AND ARE DETERMINED AT DATUM PLANE -H-.

7. THIS DIMENSION DOES NOT INCLUDE DAMBAR PROTRUSTION, ALLOWABLE DAMBAR PROTRUSION SHALL BE 0.08 TOTAL IN EXCESS OF THE D DIMENSION AT MAXIMUM MATERIAL CONDITION. DAMBAR CANNOT BE LOCATED ON THE LOWER RADIUS OR THE FOOT.

© FREESCALE SEMICONDUCTOR, INC.
ALL RIGHTS RESERVED.

MECHANICAL OUTLINE	PRINT VERSION NOT TO SCALE	
TITLE: 44LD QFP, 10X10X2.0 PKG, 0.8 PITCH	DOCUMENT NO: 98ASB42839B	REV: B
	CASE NUMBER: 824A-01	06 APR 2005
	STANDARD: NON-JEDEC	

How to Reach Us:

Home Page:
www.freescale.com

Web Support:
http://www.freescale.com/support

USA/Europe or Locations Not Listed:
Freescale Semiconductor, Inc.
Technical Information Center, EL516
2100 East Elliot Road
Tempe, Arizona 85284
1-800-521-6274 or +1-480-768-2130
www.freescale.com/support

Europe, Middle East, and Africa:
Freescale Halbleiter Deutschland GmbH
Technical Information Center
Schatzbogen 7
81829 Muenchen, Germany
+44 1296 380 456 (English)
+46 8 52200080 (English)
+49 89 92103 559 (German)
+33 1 69 35 48 48 (French)
www.freescale.com/support

Japan:
Freescale Semiconductor Japan Ltd.
Headquarters
ARCO Tower 15F
1-8-1, Shimo-Meguro, Meguro-ku,
Tokyo 153-0064
Japan
0120 191014 or +81 3 5437 9125
support.japan@freescale.com

Asia/Pacific:
Freescale Semiconductor China Ltd.
Exchange Building 23F
No. 118 Jianguo Road
Chaoyang District
Beijing 100022
China
+86 10 5879 8000
support.asia@freescale.com

For Literature Requests Only:
Freescale Semiconductor Literature Distribution Center
P.O. Box 5405
Denver, Colorado 80217
1-800-441-2447 or +1-303-675-2140
Fax: +1-303-675-2150
LDCForFreescaleSemiconductor@hibbertgroup.com

Information in this document is provided solely to enable system and software implementers to use Freescale Semiconductor products. There are no express or implied copyright licenses granted hereunder to design or fabricate any integrated circuits or integrated circuits based on the information in this document.

Freescale Semiconductor reserves the right to make changes without further notice to any products herein. Freescale Semiconductor makes no warranty, representation or guarantee regarding the suitability of its products for any particular purpose, nor does Freescale Semiconductor assume any liability arising out of the application or use of any product or circuit, and specifically disclaims any and all liability, including without limitation consequential or incidental damages. “Typical” parameters that may be provided in Freescale Semiconductor data sheets and/or specifications can and do vary in different applications and actual performance may vary over time. All operating parameters, including “Typicals”, must be validated for each customer application by customer’s technical experts. Freescale Semiconductor does not convey any license under its patent rights nor the rights of others. Freescale Semiconductor products are not designed, intended, or authorized for use as components in systems intended for surgical implant into the body, or other applications intended to support or sustain life, or for any other application in which the failure of the Freescale Semiconductor product could create a situation where personal injury or death may occur. Should Buyer purchase or use Freescale Semiconductor products for any such unintended or unauthorized application, Buyer shall indemnify and hold Freescale Semiconductor and its officers, employees, subsidiaries, affiliates, and distributors harmless against all claims, costs, damages, and expenses, and reasonable attorney fees arising out of, directly or indirectly, any claim of personal injury or death associated with such unintended or unauthorized use, even if such claim alleges that Freescale Semiconductor was negligent regarding the design or manufacture of the part.

RoHS-compliant and/or Pb-free versions of Freescale products have the functionality and electrical characteristics as their non-RoHS-compliant and/or non-Pb-free counterparts. For further information, see http://www.freescale.com or contact your Freescale sales representative.

For information on Freescale’s Environmental Products program, go to http://www.freescale.com/epp.

Freescale™ and the Freescale logo are trademarks of Freescale Semiconductor, Inc. All other product or service names are the property of their respective owners.

© Freescale Semiconductor, Inc. 2005-2008. All rights reserved.

MC9S08GB60A
Rev. 2, 07/2008

Mouser Electronics

Authorized Distributor

Click to View Pricing, Inventory, Delivery & Lifecycle Information:

Freescale Semiconductor:
MC9S08GB60ACFUER MC9S08GT60ACFDER MC9S08GT60ACFBER MC9S08GT32ACFDER
MC9S08GB60ACFUE MC9S08GT60ACFBE MC9S08GB32ACFUE MC9S08GT60ACFDE MC9S08GT32ACFDE
MC9S08GT32ACFBE MC9S08GT32ACFBER