Radial Leaded Multilayer Ceramic Capacitors for General Purpose Class 1 and Class 2, 50 V_{DC}, 100 V_{DC}, 200 V_{DC}, 500 V_{DC}

FEATURES

- High capacitance with small size
- High reliability
- Crimp and straight leadstyles
- Material categorization: for definitions of compliance please see www.vishay.com/doc?99912

Pb
e3
RoHS COMPLIANT

APPLICATIONS

- Temperature compensation
- Coupling and decoupling

QUICK REFERENCE DATA

DESCRIPTION	VALUE							
Ceramic Class	1				2			
Ceramic Dielectric	C0G				X7R			
Voltage (V_{DC})	50	100	200	500	50	100	200	500
Min. Capacitance (pF)	10	10	33	33	100	100	100	100
Max. Capacitance (pF)	10 000	5600	3900	1800	1 000 000	560 000	220 000	47 000
Mounting	Radial							

MARKING

Marking indicates capacitance value and tolerance in accordance with “EIA 198” and voltage marks.

OPERATING TEMPERATURE RANGE

C0G, X7R: - 55 °C to + 125 °C

TEMPERATURE CHARACTERISTICS

Class 1: C0G

Class 2: X7R

SECTIONAL SPECIFICATIONS

Climatic category (acc. to EN 60058-1)

Class 1 and 2: 55/125/21

APPROVALS

EIA 198

IEC 60384-9

DESIGN

- The capacitors consist of a general purpose MLCC
- The lead wires are 0.5 mm and are made of 100 % tinned copper clad steel wire
- The capacitors may be supplied with straight or kinked leads having a lead spacing of 2.5 mm and 5.0 mm
- Coating is made of yellow colored flame retardant epoxy resin in accordance with UL 94 V-0

CAPACITANCE RANGE

10 pF to 1 μF

TOLERANCE ON CAPACITANCE

± 5 %, ± 10 %, ± 20 %

RATED VOLTAGE

50 V_{DC}, 100 V_{DC}, 200 V_{DC}, 500 V_{DC}

TEST VOLTAGE

- 50 V_{DC} and 100 V_{DC}: 250 % of rated voltage
- 200 V_{DC}: 150 % of rated voltage + 100 V_{DC}
- 500 V_{DC}: 130 % of rated voltage + 100 V_{DC}

INSULATION RESISTANCE AT RATED VOLTAGE

- 50 V_{DC} and 100 V_{DC}: 100 GΩ or 1000 ΩF, whichever is less at rated voltage within 2 min of charging
- 200 V_{DC}, 500 V_{DC}, and size 10: 10 GΩ or 100 ΩF, whichever is less at rated voltage within 2 min of charging

DISSIPATION FACTOR

Class 1: 0.1 % max. when C ≥ 30 pF (at 1 MHz; 1 V where C ≤ 1000 pF, and at 1 kHz; 1 V where C > 1000 pF)

For C < 30 pF: DF = 100/(400 + 20 x C)
DF = dissipation factor in %;
C = capacitance value in pF

Class 2: 2.5 % max. (at 1 kHz; 1 V)

For technical questions, contact: cmll@vishay.com
THIS DOCUMENT IS SUBJECT TO CHANGE WITHOUT NOTICE. THE PRODUCTS DESCRIBED HEREIN AND THIS DOCUMENT ARE SUBJECT TO SPECIFIC DISCLAIMERS, SET FORTH AT www.vishay.com/doc?91000

LEAD CONFIGURATION AND DIMENSIONS (in millimeters)

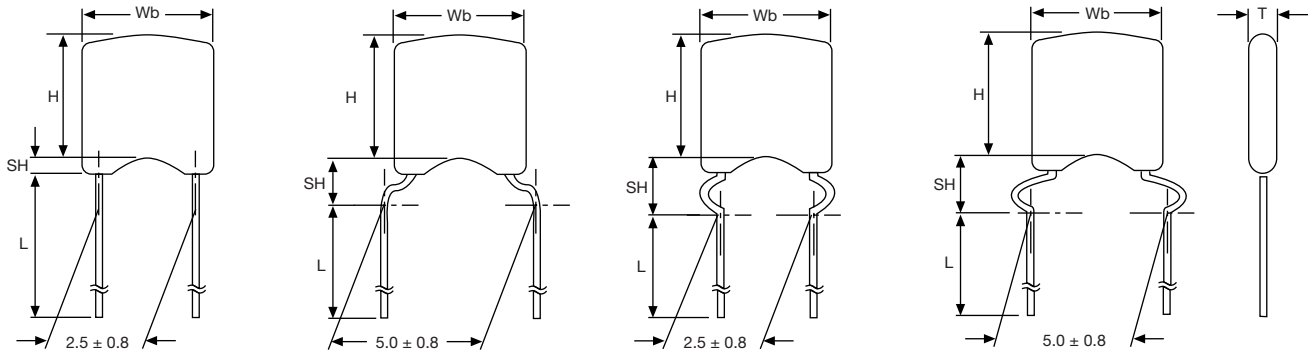

L2
Component outline for lead spacing 2.5 mm ± 0.8 mm (straight leads)

H5
Component outline for lead spacing 5.0 mm ± 0.8 mm (flat bent leads)

K2
Component outline for lead spacing 2.5 mm ± 0.8 mm (outside kink)

K5
Component outline for lead spacing 5.0 mm ± 0.8 mm (outside kink)

SIZE CODE	$Wb_{MAX.}$	$H_{MAX.}$	$T_{MAX.}$	MAXIMUM SEATING HEIGHT (SH)			
				L2	H5	K2	K5
10	3.6	3.6	2.3	1.6	2.6	3.5	-
15	4.0	4.0	2.6	1.6	2.6	3.5	3.5
20	5.0	5.0	3.2	1.6	2.6	3.5	3.5

Notes
- Bulk packed types have a standard lead length L = 30 mm ± 5 mm
- The K5 lead style is not available for size 10
- L2 and H5 are preferred styles

MARKING

SIZE 10 AND 15 CAPACITANCE VALUE < 100 pF

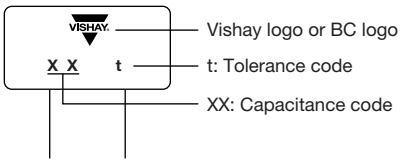

SIZE 10 AND 15 CAPACITANCE VALUE ≥ 100 pF

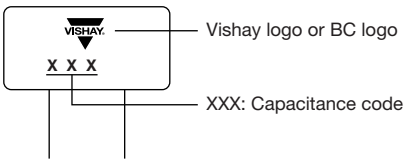

SIZE 20

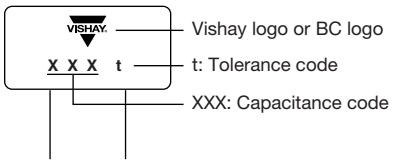

Notes
- The capacitance code indicates actual capacitance in pF when capacitance value < 100 pF
- Two significant digits followed by one digit for the multiplier as given following: 1 = * 10, 2 = * 100, 3 = * 1000, 4 = * 10 000, 5 = * 100 000
- The tolerance codes are J = 5 %, K = 10 %, M = 20 %

ORDERING CODE INFORMATION

K	104	K	15	X7R	F	5	3	H	5
1	2 3 4	5	6 7	8 9 10	11	12	13	14	15
Product Type	**Capacitance (pF)**	**Capacitance Tolerance**	**Size Code**	**T.C. Code**	**Rated Voltage**	**Lead Diameter**	**Packaging / Lead Length**	**Lead Style**	**Lead Spacing**
K = radial leaded MLCC	The first two digits are the significant figures of capacitance and the last digit is a multiplier as follows: 0 = * 1 1 = * 10 2 = * 100 3 = * 1000 4 = * 10 000 5 = * 100 000	J = ± 5 % K = ± 10 % M = ± 20 %	Please refer to relevant datasheet	Please refer to relevant datasheet	F = 50 V_{DC} H = 100 V_{DC} K = 200 V_{DC} L = 500 V_{DC}	5 = 0.50 mm ± 0.05 mm	3 = bulk T = tape and reel U = ammo	H = flat crimp L = straight K = outside crimp	2 = 2.5 mm 5 = 5.0 mm

For technical questions, contact: cmll@vishay.com
THIS DOCUMENT IS SUBJECT TO CHANGE WITHOUT NOTICE. THE PRODUCTS DESCRIBED HEREIN AND THIS DOCUMENT ARE SUBJECT TO SPECIFIC DISCLAIMERS, SET FORTH AT www.vishay.com/doc?91000

ORDERING CODES

DIELECTRIC C0G						
CAP. (pF)	50 V_{DC}		100 V_{DC}		200 V_{DC}	500 V_{DC}
	SMALLER SIZE	NORMAL SIZE	SMALLER SIZE	NORMAL SIZE	NORMAL SIZE	NORMAL SIZE
10	K100#10C0GF5###	K100#15C0GF5###	K100#10C0GH5###	K100#15C0GH5###	-	-
12	K120#10C0GF5###	K120#15C0GF5###	K120#10C0GH5###	K120#15C0GH5###	-	-
15	K150#10C0GF5###	K150#15C0GF5###	K150#10C0GH5###	K150#15C0GH5###	-	-
18	K180#10C0GF5###	K180#15C0GF5###	K180#10C0GH5###	K180#15C0GH5###	-	-
22	K220#10C0GF5###	K220#15C0GF5###	K220#10C0GH5###	K220#15C0GH5###	-	-
27	K270#10C0GF5###	K270#15C0GF5###	K270#10C0GH5###	K270#15C0GH5###	-	-
33	K330#10C0GF5###	K330#15C0GF5###	K330#10C0GH5###	K330#15C0GH5###	K330#15C0GK5###	K330#15C0GL5##5
39	K390#10C0GF5###	K390#15C0GF5###	K390#10C0GH5###	K390#15C0GH5###	K390#15C0GK5###	K390#15C0GL5##5
47	K470#10C0GF5###	K470#15C0GF5###	K470#10C0GH5###	K470#15C0GH5###	K470#15C0GK5###	K470#15C0GL5##5
56	K560#10C0GF5###	K560#15C0GF5###	K560#10C0GH5###	K560#15C0GH5###	K560#15C0GK5###	K560#15C0GL5##5
68	K680#10C0GF5###	K680#15C0GF5###	K680#10C0GH5###	K680#15C0GH5###	K680#15C0GK5###	K680#15C0GL5##5
82	K820#10C0GF5###	K820#15C0GF5###	K820#10C0GH5###	K820#15C0GH5###	K820#15C0GK5###	K820#15C0GL5##5
100	K101#10C0GF5###	K101#15C0GF5###	K101#10C0GH5###	K101#15C0GH5###	K101#15C0GK5###	K101#15C0GL5##5
120	K121#10C0GF5###	K121#15C0GF5###	K121#10C0GH5###	K121#15C0GH5###	K121#15C0GK5###	K121#15C0GL5##5
150	K151#10C0GF5###	K151#15C0GF5###	K151#10C0GH5###	K151#15C0GH5###	K151#15C0GK5###	K151#15C0GL5##5
180	K181#10C0GF5###	K181#15C0GF5###	K181#10C0GH5###	K181#15C0GH5###	K181#15C0GK5###	K181#15C0GL5##5
220	K221#10C0GF5###	K221#15C0GF5###	K221#10C0GH5###	K221#15C0GH5###	K221#15C0GK5###	K221#15C0GL5##5
270	K271#10C0GF5###	K271#15C0GF5###	K271#10C0GH5###	K271#15C0GH5###	K271#15C0GK5###	K271#15C0GL5##5
330	K331#10C0GF5###	K331#15C0GF5###	K331#10C0GH5###	K331#15C0GH5###	K331#15C0GK5###	K331#15C0GL5##5
390	K391#10C0GF5###	K391#15C0GF5###	K391#10C0GH5###	K391#15C0GH5###	K391#15C0GK5###	K391#15C0GL5##5
470	K471#10C0GF5###	K471#15C0GF5###	K471#10C0GH5###	K471#15C0GH5###	K471#15C0GK5###	K471#20C0GL5##5
560	K561#10C0GF5###	K561#15C0GF5###	K561#10C0GH5###	K561#15C0GH5###	K561#15C0GK5###	K561#20C0GL5##5
680	K681#10C0GF5###	K681#15C0GF5###	-	K681#15C0GH5###	K681#15C0GK5###	K681#20C0GL5##5
820	K821#10C0GF5###	K821#15C0GF5###	-	K821#15C0GH5###	K821#15C0GK5###	K821#20C0GL5##5
1000	K102#10C0GF5###	K102#15C0GF5###	-	K102#20C0GH5###	K102#20C0GK5###	K102#20C0GL5##5
1200	-	K122#15C0GF5###	-	K122#20C0GH5###	K122#20C0GK5###	K122#20C0GL5##5
1500	-	K152#15C0GF5###	-	K152#20C0GH5###	K152#20C0GK5###	K152#20C0GL5##5
1800	-	K182#15C0GF5###	-	K182#20C0GH5###	K182#20C0GK5###	K182#20C0GL5##5
2200	-	K222#15C0GF5###	-	K222#20C0GH5###	K222#20C0GK5###	-
2700	-	K272#20C0GF5###	-	K272#20C0GH5###	K272#20C0GK5###	-
3300	-	K332#20C0GF5###	-	K332#20C0GH5###	K332#20C0GK5###	-
3900	-	K392#20C0GF5###	-	K392#20C0GH5###	K392#20C0GK5###	-
4700	-	K472#20C0GF5###	-	K472#20C0GH5###	-	-
5600	-	K562#20C0GF5###	-	K562#20C0GH5###	-	-
6800	-	K682#20C0GF5###	-	-	-	-
8200	-	K822#20C0GF5###	-	-	-	-
10 000	-	K103#20C0GF5###	-	-	-	-

Notes

- Lead diameter is 0.5 mm
- # 5th digit is capacitance tolerance code: ± 5 % = J; ± 10 % = K
- # 13th digit is packaging code: bulk = 3; reel = T; ammo = U
- # 14th digit is lead style code: L; H; K (L and H are preferred lead configuration)
- # 15th digit is lead spacing code: 2.5 mm = 2; 5.0 mm = 5

For technical questions, contact: cmll@vishay.com
THIS DOCUMENT IS SUBJECT TO CHANGE WITHOUT NOTICE. THE PRODUCTS DESCRIBED HEREIN AND THIS DOCUMENT ARE SUBJECT TO SPECIFIC DISCLAIMERS, SET FORTH AT www.vishay.com/doc?91000

DIELECTRIC X7R						
CAP. (pF)	50 V_{DC}		100 V_{DC}		200 V_{DC}	500 V_{DC}
	SMALLER SIZE	NORMAL SIZE	SMALLER SIZE	NORMAL SIZE	NORMAL SIZE	NORMAL SIZE
100	K101#10X7RF5###	K101#15X7RF5###	K101#10X7RH5###	K101#15X7RH5###	K101#15X7RK5###	K101#15X7RL5##5
120	K121#10X7RF5###	K121#15X7RF5###	K121#10X7RH5###	K121#15X7RH5###	K121#15X7RK5###	K121#15X7RL5##5
150	K151#10X7RF5###	K151#15X7RF5###	K151#10X7RH5###	K151#15X7RH5###	K151#15X7RK5###	K151#15X7RL5##5
180	K181#10X7RF5###	K181#15X7RF5###	K181#10X7RH5###	K181#15X7RH5###	K181#15X7RK5###	K181#15X7RL5##5
220	K221#10X7RF5###	K221#15X7RF5###	K221#10X7RH5###	K221#15X7RH5###	K221#15X7RK5###	K221#15X7RL5##5
270	K271#10X7RF5###	K271#15X7RF5###	K271#10X7RH5###	K271#15X7RH5###	K271#15X7RK5###	K271#15X7RL5##5
330	K331#10X7RF5###	K331#15X7RF5###	K331#10X7RH5###	K331#15X7RH5###	K331#15X7RK5###	K331#15X7RL5##5
390	K391#10X7RF5###	K391#15X7RF5###	K391#10X7RH5###	K391#15X7RH5###	K391#15X7RK5###	K391#15X7RL5##5
470	K471#10X7RF5###	K471#15X7RF5###	K471#10X7RH5###	K471#15X7RH5###	K471#15X7RK5###	K471#15X7RL5##5
560	K561#10X7RF5###	K561#15X7RF5###	K561#10X7RH5###	K561#15X7RH5###	K561#15X7RK5###	K561#15X7RL5##5
680	K681#10X7RF5###	K681#15X7RF5###	K681#10X7RH5###	K681#15X7RH5###	K681#15X7RK5###	K681#15X7RL5##5
820	K821#10X7RF5###	K821#15X7RF5###	K821#10X7RH5###	K821#15X7RH5###	K821#15X7RK5###	K821#15X7RL5##5
1000	K102#10X7RF5###	K102#15X7RF5###	K102#10X7RH5###	K102#15X7RH5###	K102#15X7RK5###	K102#15X7RL5##5
1200	K122#10X7RF5###	K122#15X7RF5###	K122#10X7RH5###	K122#15X7RH5###	K122#15X7RK5###	K122#15X7RL5##5
1500	K152#10X7RF5###	K152#15X7RF5###	K152#10X7RH5###	K152#15X7RH5###	K152#15X7RK5###	K152#15X7RL5##5
1800	K182#10X7RF5###	K182#15X7RF5###	K182#10X7RH5###	K182#15X7RH5###	K182#15X7RK5###	K182#15X7RL5##5
2200	K222#10X7RF5###	K222#15X7RF5###	K222#10X7RH5###	K222#15X7RH5###	K222#15X7RK5###	K222#15X7RL5##5
2700	K272#10X7RF5###	K272#15X7RF5###	K272#10X7RH5###	K272#15X7RH5###	K272#15X7RK5###	K272#15X7RL5##5
3300	K332#10X7RF5###	K332#15X7RF5###	K332#10X7RH5###	K332#15X7RH5###	K332#15X7RK5###	K332#20X7RL5##5
3900	K392#10X7RF5###	K392#15X7RF5###	K392#10X7RH5###	K392#15X7RH5###	K392#15X7RK5###	K392#20X7RL5##5
4700	K472#10X7RF5###	K472#15X7RF5###	K472#10X7RH5###	K472#15X7RH5###	K472#15X7RK5###	K472#20X7RL5##5
5600	K562#10X7RF5###	K562#15X7RF5###	K562#10X7RH5###	K562#15X7RH5###	K562#15X7RK5###	K562#20X7RL5##5
6800	K682#10X7RF5###	K682#15X7RF5###	K682#10X7RH5###	K682#15X7RH5###	K682#15X7RK5###	K682#20X7RL5##5
8200	K822#10X7RF5###	K822#15X7RF5###	K822#10X7RH5###	K822#15X7RH5###	K822#15X7RK5###	K822#20X7RL5##5
10 000	K103#10X7RF5###	K103#15X7RF5###	K103#10X7RH5###	K103#15X7RH5###	K103#15X7RK5###	K103#20X7RL5##5
12 000	K123#10X7RF5###	K123#15X7RF5###	-	K123#15X7RH5###	K123#15X7RK5###	K123#20X7RL5##5
15 000	K153#10X7RF5###	K153#15X7RF5###	-	K153#15X7RH5###	K153#15X7RK5###	K153#20X7RL5##5
18 000	K183#10X7RF5###	K183#15X7RF5###	-	K183#15X7RH5###	K183#15X7RK5###	K183#20X7RL5##5
22 000	K223#10X7RF5###	K223#15X7RF5###	-	K223#15X7RH5###	K223#15X7RK5###	K223#20X7RL5##5
27 000	K273#10X7RF5###	K273#15X7RF5###	-	K273#20X7RH5###	K273#20X7RK5###	K273#20X7RL5##5
33 000	K333#10X7RF5###	K333#15X7RF5###	-	K333#20X7RH5###	K333#20X7RK5###	K333#20X7RL5##5
39 000	K393#10X7RF5###	K393#15X7RF5###	-	K393#20X7RH5###	K393#20X7RK5###	K393#20X7RL5##5
47 000	K473#10X7RF5###	K473#15X7RF5###	-	K473#20X7RH5###	K473#20X7RK5###	K473#20X7RL5##5
56 000	K563#10X7RF5###	K563#15X7RF5###	-	K563#20X7RH5###	K563#20X7RK5###	-
68 000	K683#10X7RF5###	K683#15X7RF5###	-	K683#20X7RH5###	K683#20X7RK5###	-
82 000	K823#10X7RF5###	K823#15X7RF5###	-	K823#20X7RH5###	K823#20X7RK5###	-
100 000	K104#10X7RF5###	K104#15X7RF5###	-	K104#20X7RH5###	K104#20X7RK5###	-
150 000	-	K154#20X7RF5###	-	K154#20X7RH5###	K154#20X7RK5###	-
220 000	-	K224#20X7RF5###	-	K224#20X7RH5###	K224#20X7RK5###	-
330 000	-	K334#20X7RF5###	-	K334#20X7RH5###	-	-
470 000	-	K474#20X7RF5###	-	K474#20X7RH5###	-	-
560 000	-	K564#20X7RF5###	-	K564#20X7RH5###	-	-
680 000	-	K684#20X7RF5###	-	-	-	-
1 000 000	-	K105#20X7RF5###	-	-	-	-

Notes

- Lead diameter is 0.5 mm
- # 5th digit is capacitance tolerance code: ± 10 % = K; ± 20 % = M
- # 13th digit is packaging code: bulk = 3; reel = T; ammo = U
- # 14th digit is lead style code: L; H; K (L and H are preferred lead configuration)
- # 15th digit is lead spacing code: 2.5 mm = 2; 5.0 mm = 5

For technical questions, contact: cmll@vishay.com
THIS DOCUMENT IS SUBJECT TO CHANGE WITHOUT NOTICE. THE PRODUCTS DESCRIBED HEREIN AND THIS DOCUMENT ARE SUBJECT TO SPECIFIC DISCLAIMERS, SET FORTH AT www.vishay.com/doc?91000

TAPING AND PACKAGING

LABELLING

Each reel is provided with a label showing the following details:

Manufacturer, K style, capacitance, tolerance, batch number, quantity of components, rated voltage, dielectric.

On special request other designations can be shown.

For example:

PACKAGING QUANTITIES AND BOX DIMENSIONS			
PACKAGING	**SIZE CODE**	**SMALLEST PACKAGING QUANTITY (SPQ)**	**BOX DIMENSIONS L x W x H (mm)**
Tape on reel	10, 15	4000	370 x 370 x 60
	20	3000	
Ammopack	10, 15, 20	2500	335 x 290 x 50
Bulk [1]	10, 15, 20	5000	245 x 120 x 65

Note

[1] SPQ contains one or a multiple of poly-bags, 1000 units per bag

For technical questions, contact: cmll@vishay.com
THIS DOCUMENT IS SUBJECT TO CHANGE WITHOUT NOTICE. THE PRODUCTS DESCRIBED HEREIN AND THIS DOCUMENT ARE SUBJECT TO SPECIFIC DISCLAIMERS, SET FORTH AT www.vishay.com/doc?91000

CAPACITORS ON TAPE

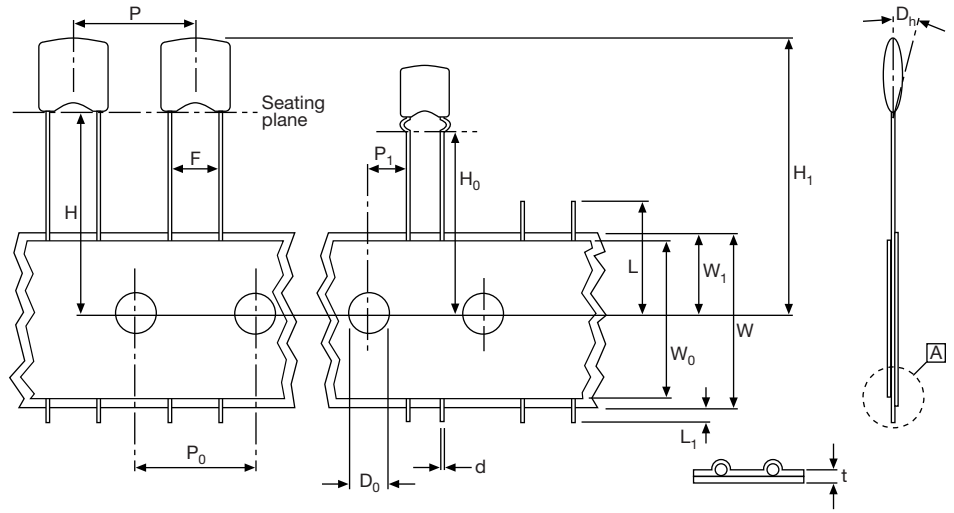

PARAMETER	SYMBOL	DIMENSIONS	
		mm	INCH
Cut-off length	L	≤ 11.0	≤ 0.443
Lead end protrusion	L_1	≤ 1.0	≤ 0.039
Height to seating plane (straight leads)	H	≥ 18.0	≥ 0.709
Height to seating plane (crimp leads)	H_0	16.0 ± 0.5	0.630 ± 0.020
Top of component height	H_1	≤ 32	≤ 1.26
Body inclination	Δh	0.0 ± 1.0	0.000 ± 0.039
Carrier tape width	W	18.0 + 1.0/- 0.5	0.709 + 0.039/- 0.020
Hold down tape width	W_0	15.0 REF.	0.591 REF.
Sprocket hole position	W_1	9.00 + 0.075/- 0.50	0.354 + 0.030/- 0.020
Lead space	F	2.50 + 0.60/- 0.40	0.100 + 0.024/- 0.016
		5.00 + 0.60/- 0.40	0.200 + 0.024/- 0.016
Sprocket hole pitch	P_0	12.70 ± 0.3	0.500 ± 0.012
Sprocket hole center to lead center at F = 2.5 mm	P_1	5.08 ± 0.7	0.200 ± 0.028
Sprocket hole center to lead center at F = 5 mm		3.85 ± 0.7	0.150 ± 0.028
Sprocket hole diameter	D_0	4.00 ± 0.30	0.157 ± 0.012
Overall tape thickness	t	≤ 0.90	≤ 0.035
Wire lead diameter	d	0.50 ± 0.05	0.020 ± 0.002
Taping pitch	P	12.7 REF.	0.50 REF.

For technical questions, contact: cmll@vishay.com
THIS DOCUMENT IS SUBJECT TO CHANGE WITHOUT NOTICE. THE PRODUCTS DESCRIBED HEREIN AND THIS DOCUMENT ARE SUBJECT TO SPECIFIC DISCLAIMERS, SET FORTH AT www.vishay.com/doc?91000

REEL DATA

A maximum of 0.5 % of the total number of capacitors per reel may be missing.

A maximum of 1 consecutive vacant positions is followed by 6 consecutive components.

Tape begins and ends with a minimum of 4 empty positions (50 mm tape).

Maximum of 5 splicers per reel.

REEL

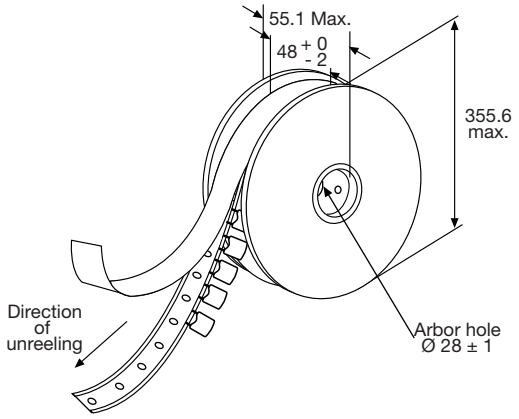

REEL DIMENSIONS

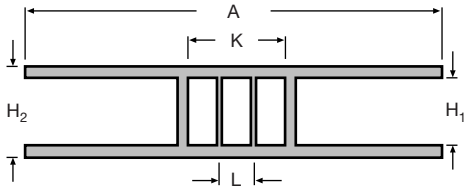

REEL SIZE		(mm)
A	Outer diameter	355.6 max.
L	Hole diameter	28 ± 1.5
K	Core diameter	90
H_1	Internal width	48 + 0/- 2
H_2	External width	55 max.

AMMOPACK DATA

A maximum of 0.5 % of the total number of capacitors per box may be missing.

A maximum of 2 consecutive vacant positions is followed by 6 consecutive components.

Tape begins and ends with a minimum of 4 empty positions (50 mm tape).

Maximum of 5 splicers per reel.

The cumulative pitch tolerance over 20 consecutive units is not to exceed ± 1.0 mm.

Lead space (F) shall be measured at (3.6 ± 0.5) mm from the capacitor seating plane.

AMMOPACK

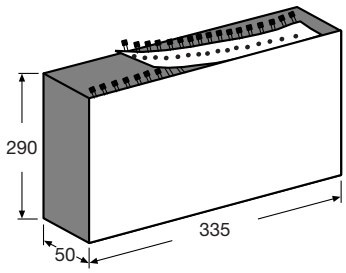

RELATED DOCUMENTS

General Information	www.vishay.com/doc?45163

For technical questions, contact: cmll@vishay.com
THIS DOCUMENT IS SUBJECT TO CHANGE WITHOUT NOTICE. THE PRODUCTS DESCRIBED HEREIN AND THIS DOCUMENT ARE SUBJECT TO SPECIFIC DISCLAIMERS, SET FORTH AT www.vishay.com/doc?91000

Disclaimer

ALL PRODUCT, PRODUCT SPECIFICATIONS AND DATA ARE SUBJECT TO CHANGE WITHOUT NOTICE TO IMPROVE RELIABILITY, FUNCTION OR DESIGN OR OTHERWISE.

Vishay Intertechnology, Inc., its affiliates, agents, and employees, and all persons acting on its or their behalf (collectively, “Vishay”), disclaim any and all liability for any errors, inaccuracies or incompleteness contained in any datasheet or in any other disclosure relating to any product.

Vishay makes no warranty, representation or guarantee regarding the suitability of the products for any particular purpose or the continuing production of any product. To the maximum extent permitted by applicable law, Vishay disclaims (i) any and all liability arising out of the application or use of any product, (ii) any and all liability, including without limitation special, consequential or incidental damages, and (iii) any and all implied warranties, including warranties of fitness for particular purpose, non-infringement and merchantability.

Statements regarding the suitability of products for certain types of applications are based on Vishay's knowledge of typical requirements that are often placed on Vishay products in generic applications. Such statements are not binding statements about the suitability of products for a particular application. It is the customer's responsibility to validate that a particular product with the properties described in the product specification is suitable for use in a particular application. Parameters provided in datasheets and / or specifications may vary in different applications and performance may vary over time. All operating parameters, including typical parameters, must be validated for each customer application by the customer's technical experts. Product specifications do not expand or otherwise modify Vishay's terms and conditions of purchase, including but not limited to the warranty expressed therein.

Hyperlinks included in this datasheet may direct users to third-party websites. These links are provided as a convenience and for informational purposes only. Inclusion of these hyperlinks does not constitute an endorsement or an approval by Vishay of any of the products, services or opinions of the corporation, organization or individual associated with the third-party website. Vishay disclaims any and all liability and bears no responsibility for the accuracy, legality or content of the third-party website or for that of subsequent links.

Except as expressly indicated in writing, Vishay products are not designed for use in medical, life-saving, or life-sustaining applications or for any other application in which the failure of the Vishay product could result in personal injury or death. Customers using or selling Vishay products not expressly indicated for use in such applications do so at their own risk. Please contact authorized Vishay personnel to obtain written terms and conditions regarding products designed for such applications.

No license, express or implied, by estoppel or otherwise, to any intellectual property rights is granted by this document or by any conduct of Vishay. Product names and markings noted herein may be trademarks of their respective owners.

© 2024 VISHAY INTERTECHNOLOGY, INC. ALL RIGHTS RESERVED