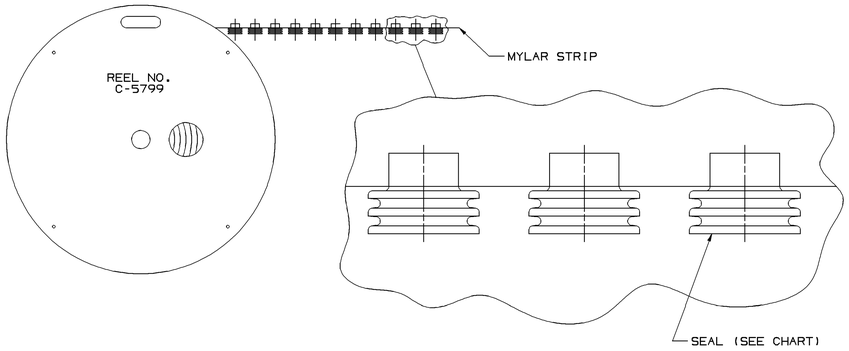
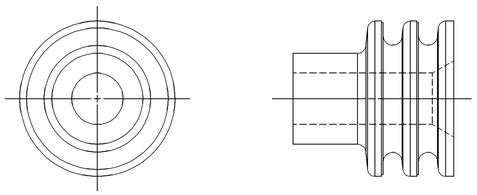


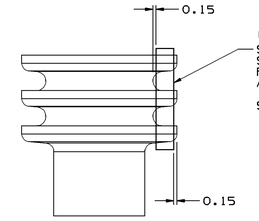
SEAL/MYLAR ASSEMBLY DETAIL

NOTES

1. THE MYLAR TAPE IS ONLY A CARRIER USED AS A PROCESS AID AND IS NOT PART OF THE FINAL HARNESS ASSEMBLY.
2. WHEN PARTS ARE SHIPPED, THEY MUST BE PACKED IN PLASTICS BAGS OR SHIPPING CONTAINERS MUST BE LINED WITH PLASTIC LINERS. BAGS OR LINERS MUST BE SEALED TO AVOID ENTRY OF FOREIGN MATTER.



TYPE 102
SAME AS TYPE 101
EXCEPT FOR INTERNAL SEALING FEATURES

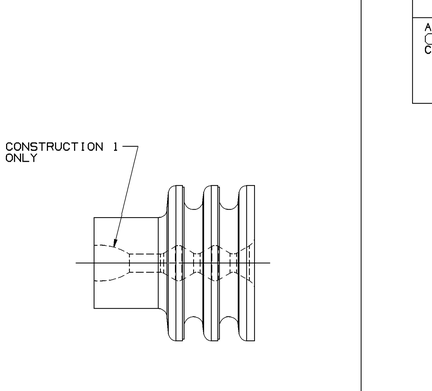


(6) SEALING RIBS MUST BE FREE OF SINKS, VOIDS, KNIT LINES AND FLASH, IN THE AREA SHOWN ALL AROUND PART.

SEE VPS A-121 FOR ADDITIONAL INFORMATION

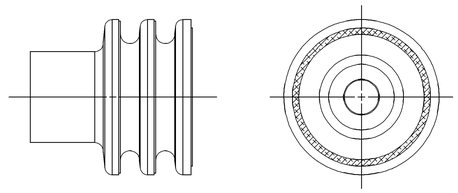
TYPE 103
SAME AS TYPE 101
EXCEPT FOR INTERNAL SEALING FEATURES

TYPE 101

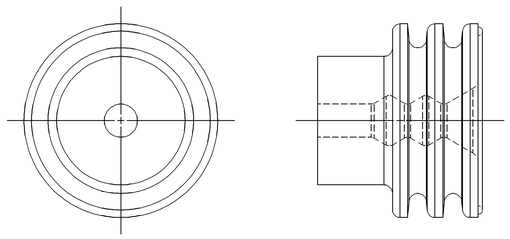


SEALING RIBS MAY DIFFER AS SHOWN

OPTIONAL CONSTRUCTION 1
TYPE 103 ONLY



OPTIONAL CONSTRUCTION 2
(ANTI-STICK RING)



OPTIONAL CONSTRUCTION 3
THIS IS THE PREFERRED CONSTRUCTION FOR NEW TOOL BUILDS
(ANTI-STICK RING)

SYMBOL DEFINITION		
A DIMENSION WITHOUT AN INSPECTION REPORT SYMBOL ( ) DOES NOT REQUIRE INSPECTION. IT MAY BE CONTROLLED ON THE INDIVIDUAL COMPONENT DRAWING.	TOTAL NO OF INSPECTIONS REQUIRED	5
	LAST NO. USED	7

MISSING SYMBOLS
4-5

DWG STATUS DATE	STS	REV	N/P	CHG	ZONE	REVISION HISTORY	AUTH	DR	APVD 1	APVD 2
15OC99	R	001	-	-		CLEARED REV COLUMN & 12146012 - OBSOLETE	990003	JHN	JVM	LRT
27JA00	R	002	-	-		15324980 - 85 - RELEASED	000005	JLZ	GMC	RH
07NO00	R	003	-	-		15324980-85 - REVISED	202978	JLZ	EAR	JR
10MR04	R	04	-	-		12010293, 12015193, 12015323, 12041351 & 12089679 REVISED PER NIN EWO 86LTS; ALL PARTS - UPDATED MATERIAL SPECS	251237	RH	RH	MR
21JN04	R	05	-	-		ADDED "ALTERNATE MATERIAL SPECIFICATION" TO CHART. ADDED PART NUMBERS 15497745-15497746, 15497754-15497755, AND 15497756-15497757.	256100	LLJ	LLJ	MR
09MR05	R	06	-	-		12010293,12015193,12015284,12015323, 12015359-60,12015899,12034365, 12041351-52,12089444,12089679, 15497745-46 AND 15497754-57 - RESTRICTED; 15324980-85 - MAT'L SPEC WAS M3466; ALL ACTIVE PARTS - REVISED NOTES AND REMOVED ø C DIM FOR TYPE 102	265538	JBD	JAA	MR
01FE06	R	07	-	-		UPDATED PDM ATTRIBUTES	276580	TS	TS	EJH
22FE06	R	08	-	-		15324980 - 85 - MAT'L SPEC WAS M3469	276914	JBD	JVM	MPR
03AU06	R	09	-	-		ALL ACTIVE PARTS - UPDATED MAT'L SPEC; ADDED ALTERNATE MAT'L SPEC, OPTIONAL CONSTRUCTION "3" & "2" VIEWS, SEALING RIBS VIEWS, OVERALL LENGTH NOTE & SEALING SURFACE NOTE AND DIMS (2PLCS); REMOVED OPTIONAL CONSTRUCTION VIEWS AND REVISED TOLERANCE DIM G	283299	JBD	FRG	MPR
03OC06	R	10	-	-		ALL ACTIVE PARTS - REMOVED INSPECTION SYMBOLS NUMBER 4 & 5; REVISED PROCESS SENSITIVE DIM AND SEALING RIBS LABEL.	284959	JBD	FRG	MPR
08JA07	R	11	-	-		15363991, 15363980, 15338470 & 10717459 - ADDED PART NUMBERS AS MYLAR ASSEMBLIES	400035	JTV	FRG	MPR

PART NO	REV	N/P	STATUS	PART NO	REV	N/P	STATUS	TYPE	MATERIAL SPECIFICATION	COLOR (REF ONLY)	ALTERNATE MATERIAL SPECIFICATION	CABLE O.D. ±0.05 SEE NOTE 3	C	F	G	CAVITY I.D.	VOL	EQUIVALENT CABLE SEAL
MYLAR & CABLE SEAL ASM				CABLE SEAL														
15497757	01	AC	RESTRICTED	15497756	01	AC	RESTRICTED	103	M2261009	PPL	-	2.15-1.6	4.25	7.5	7.25	6.7	0.164	12089679
15497755	01	AC	RESTRICTED	15497754	01	AC	RESTRICTED	102	M2261012	GRA	-	3.49-2.81	4.25	7.5	7.25	6.7	0.142	12010293
15497746	01	AC	RESTRICTED	15497745	01	AC	RESTRICTED	101	M2261001	GRN	-	2.85-2.03	4.25	7.5	7.25	6.7	0.15	12015323
15338470	B1	-	-	15324985	01	AH	-	103	M3469039	PPL	M3466039	2.15-1.6	4.25	7.5	7.25	6.7	0.164	12089679
-	-	-	-	15324984	01	AH	-	102	M3469038	TAN	M3466038	2.42-2.03	4.25	7.5	7.25	6.7	0.162	12041351
-	-	-	-	15324983	01	AH	-	103	M3469037	DK RD	M3466037	1.7-1.29	4.25	7.5	7.25	6.7	0.171	12015899
15363980	01	AA	-	15324982	01	AG	-	101	M3469007	GRN	M3466007	2.85-2.03	4.25	7.5	7.25	6.7	0.15	12015323
10717640	01	AA	-	15324981	01	AH	-	102	M3469008	BLU	M3466008	4.3-3.45	4.25	7.5	7.25	6.7	0.122	12015193
15363991	01	AA	-	15324980	01	AG	-	102	M3469003	GRA	M3466003	3.49-2.81	4.25	7.5	7.25	6.7	0.142	12010293
12146012	A1	-	OBSOLETE	12129930	C3	-	-	101	M4358005	ORN	-	2.85-2.03	4.15	7.3	7.25	6.7	0.142	-
12089444	B3	-	RESTRICTED	12089679	02	AD	RESTRICTED	103	M3471039	PPL	M2261009	2.15-1.6	4.25	7.5	7.25	6.7	0.164	15324985
-	-	-	-	12089443	B2	-	OBSOLETE	103	M2261006	YEL	-	2.15-1.6	4.25	7.5	7.25	6.7	-	-
12041352	A3	-	RESTRICTED	12041351	02	AD	RESTRICTED	102	M3471038	TAN	M2261029	2.42-2.03	4.25	7.5	7.25	6.7	0.162	15324984
12034365	A3	-	RESTRICTED	12015899	D6	-	RESTRICTED	103	M3471037	DK RD	M2261019	1.7-1.29	4.25	7.5	7.25	6.7	0.171	15324983
12015284	A3	-	RESTRICTED	12015323	04	AD	RESTRICTED	101	M3471007	GRN	M2261001	2.85-2.03	4.25	7.5	7.25	6.7	0.15	15324982
12015360	A3	-	RESTRICTED	12015193	03	AD	RESTRICTED	102	M3471008	BLU	M2261008	4.3-3.45	4.25	7.5	7.25	6.7	0.122	15324981
12015359	A3	-	RESTRICTED	12010293	11	AD	RESTRICTED	102	M3471003	GRA	M2261012	3.49-2.81	4.25	7.5	7.25	6.7	0.142	15324980
-	-	-	-	12010117	02	-	OBSOLETE	101	M2261005	ORN	-	2.8-2.03	4.25	8	7.6	6.7	-	-

(1) PROCESS SENSITIVE DIMENSION

DIMENSIONS ENCLOSED IN ( ) INDICATE REFERENCE DIMENSIONS AND NO TOLERANCE LIMITS ARE ESTABLISHED

DIMENSIONAL RANGE (MM)					CHART E
FROM	0	> 20	> 30	> 70	> 100
TO	20	30	70	100	
TOLERANCE UNLESS OTHERWISE SPECIFIED	±0.15	±0.2	±0.3	±0.4	±0.5
ANGULAR TOLERANCE ±2°					

DWG TYPE: PART DRAWING
STYLE:
VOLUME (CM³): SEE CHART
DISTR CODE:

UNLESS OTHERWISE SPECIFIED
THIS DOCUMENT IS IN ACCORDANCE WITH ASME Y14.5M-1994 AS AMENDED BY THE GM GLOBAL DIMENSIONING AND TOLERANCING ADDENDUM-2001. SEPARATE PATTERNS OF FEATURES MAY BE DATED SEPARATELY REGARDLESS OF DATUM REFERENCES.

ALL DIMENSIONS ARE IN MILLIMETERS
REFERENCE

THIRD ANGLE PROJECTION
DO NOT SCALE
USE MATH DATA
UNIGRAPHICS UNIGRAPHICS

DELPHI
DELPHI PACKARD ELECTRIC SYSTEMS
WARREN, OH

	DATE
DR	
APVD1 J. HOUGELMAN	13JAB9
APVD2 T. MUDREY	26JAB9
APVD3 A. HERMANN	31JAB9
APVD4	
APVD5	

SUBSTANCES OF CONCERN AND RECYCLED CONTENT PER DELPHI 10949001

MATERIAL: SEE CHART

DRAWING NAME: TAXI SEAL CBL 1W M/P

DRAWING NUMBER: 12010295

SIZE	SCALE	FRAME NO	SHEET NO	STG	REV	N/P
A0	10:1	1 OF 2	1 OF 6	R	11	-

Part: n15y0c_12010295-cls01-s01 Date: 17-Jan-07 Time: 16:51 Plotted by: mesopper